KUKJE A2300N2-ATC(20C-47HP)
Branson Engine

Parts Catalogue

BRANSON TRACTOR

CONTENTS

GROUP NO	GROUP NAME	PAGE
E001-1	CYLINDER BLOCK	3
E001-2	CYLINDER BLOCK(201906~)	5
E002	GEAR CASE	7
E003	FLYWHEEL HOUSING & OIL PAN	9
E004	CYLINDER HEAD & HEAD COVER	11
E005	INTAKE MANIFOLD	14
E006-1	BRACKET, COMPRESSOR	16
E007	EXHAUST MANIFOLD & SILENCER	18
E008	CAM SHAFT & DRIVING GEAR	20
E009	CRANK SHAFT & PISTON	22
E010	BALANCER	24
E011-1	LUB. OIL SYSTEM	26
E011-2	LUB. OIL SYSTEM	28
E012	COOLING SYSTEM	30
E012-2	COOLING SYSTEM	32
E013	FUEL INJECTION PUMP	34
E014	FUEL INJECTION SYSTEM	36
E015-1	FUEL SYSTEM	38
E015-2	FUEL SYSTEM(201801~)	40
E016-1	STARTING MOTOR	42
E016-2	STARTING MOTOR	44
E017-1	GENERATOR & ELECTRIC DEVICE	46
E017-2	GENERATOR & ELECTRIC DEVICE	48

FIG E001-1 A2300N2-ATC(20C-47HP)	CYLINDER BLOCK	Year/Month 2020/02

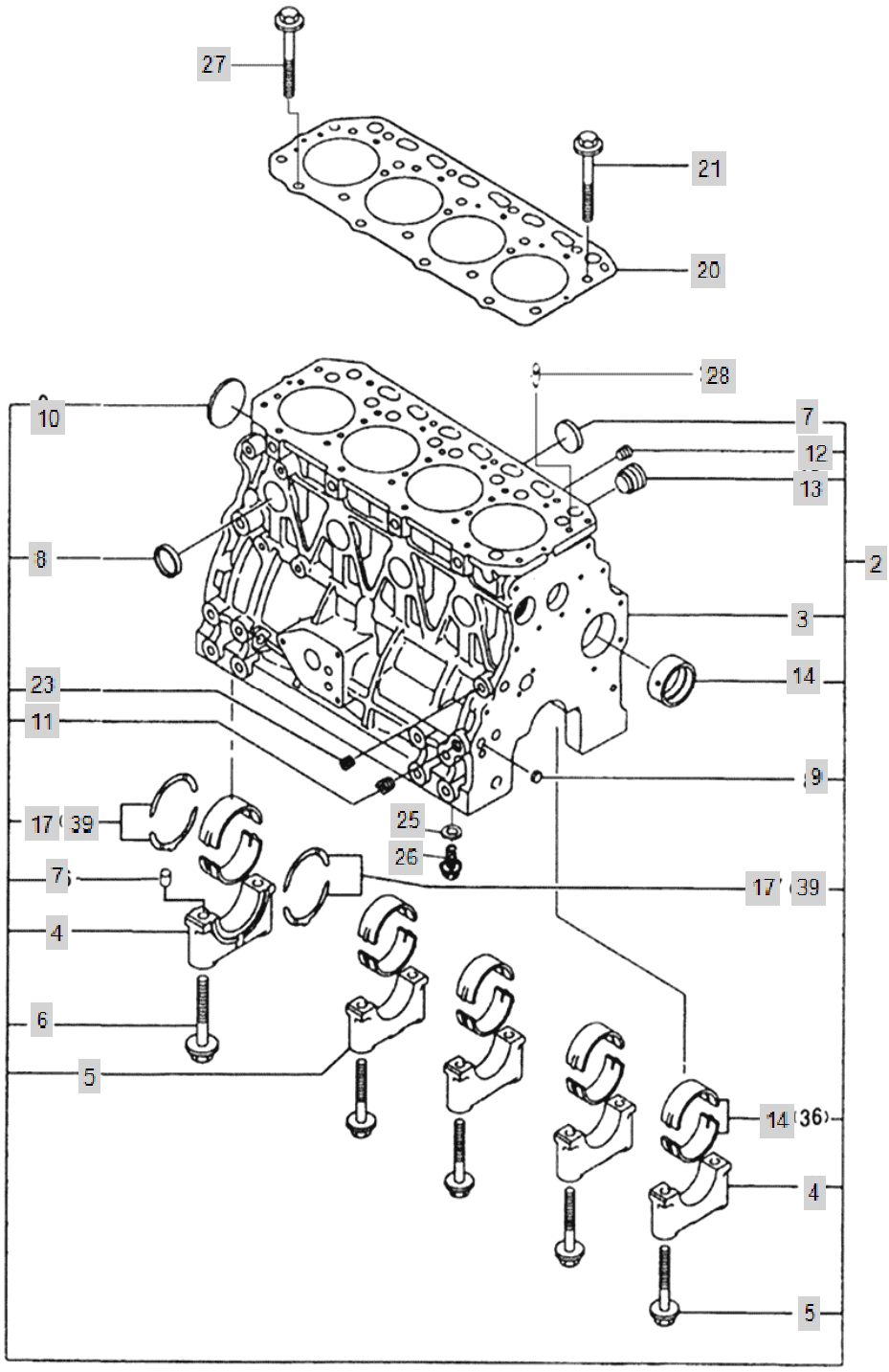

FIG E001-1 A2300N2-ATC(20C-47HP)	CYLINDER BLOCK	Year/Month 2020/02

KeyNo.	Part Number	Part Name	Quantity	Other
1	HRA0100111B9	BLOCK ASS'Y, CYLINDER	1	
2	HRA0103101A0	BLOCK, CYLINDER	1	
3	HRA0100102B3	CAP,MAIN BEARING	1	
4	HRA0100103B3	CAP,MAIN BEARING	4	
5	HRA0100104A4	SCREW,HEXFLANGEHEADCAP	10	
6	22351-030010	PIN, SPRING (3-01)	1	
7	27241-300000	PLUG (D30)	8	
8	HRA0100108A4	PLUG,EXPANSION	3	
9	27231-500000	PLUG,EXPANSION	1	
10	23871-020000	Plug, Pipe	1	
11	23871-030000	PLUG, PIPE	1	
12	HM23030000A4	PLUG	1	
13	HRU0100105A3	BUSH, CAM SHAFT	1	
14	HRA0100200A9	BEARING,MAIN->HRA0100201A3 HRA0100202A3	5	
17	HRA0100300A9	BEARING,CRANKSHAFT THRUST	2	
20	HRU0100400A2	GASKET,CYLINDER HEAD (A2300)	1	
21	HRA0100500A4	SCREW,HEXFLANGEHEADCAP	14	
23	23871-010000	PLUG	1	
25	23414-080000	WASHER, PLAIN (Φ8)	4	
26	26116-080122	SCREW,HEXAGONHEADCAP	4	
27	HRA0100700A4	SCREW,HEXFLANGEHEADCAP	4	
28	HRA0100800A4	PIN,OIL	1	
36	HRA0100200A9	BEARING,MAIN->HRA0100201A3 HRA0100202A3	5	
39	HRA0100300A9	BEARING,CRANKSHAFT THRUST	2	

FIG E001-2 A2300N2-ATC(20C-47HP)	CYLINDER BLOCK(201906~)	Year/Month 2020/02

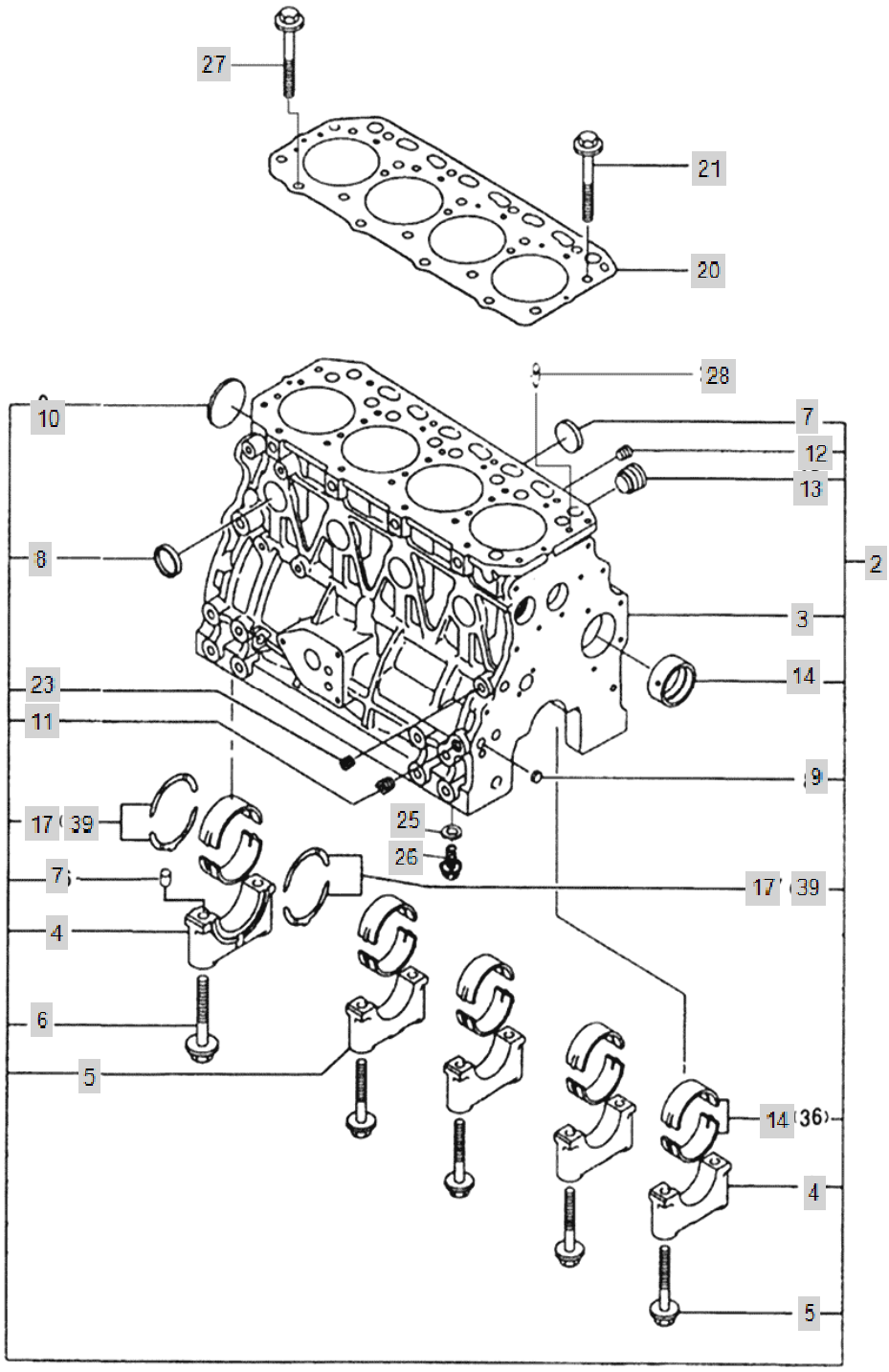

FIG E001-2 A2300N2-ATC(20C-47HP)	CYLINDER BLOCK(201906~)	Year/Month 2020/02

KeyNo.	Part Number	Part Name	Quantity	Other
1	EA00000446A	SUB BLOCK, CYLINDER	1	
2	HRA0103101A0	BLOCK, CYLINDER	1	
3	HRA0100102B3	CAP,MAIN BEARING	1	
4	HRA0100103B3	CAP,MAIN BEARING	4	
5	HRA0100104A4	SCREW,HEXFLANGEHEADCAP	10	
6	22351-030010	PIN, SPRING (3-01)	1	
7	27241-300000	PLUG (D30)	8	
8	HRA0100108A4	PLUG,EXPANSION	3	
9	27231-500000	PLUG,EXPANSION	1	
10	23871-020000	Plug, Pipe	1	
11	23871-030000	PLUG, PIPE	1	
12	HM23030000A4	PLUG	1	
13	HRU0100105A3	BUSH, CAM SHAFT	1	
14	HRA0100200A9	BEARING,MAIN->HRA0100201A3 HRA0100202A3	5	
17	HRA0100300A9	BEARING,CRANKSHAFT THRUST	2	
20	HRU0100400B2	GASKET,CYLINDER HEAD	1	
21	HRA0100500A4	SCREW,HEXFLANGEHEADCAP	14	
23	23871-010000	PLUG	1	
25	23414-080000	WASHER, PLAIN (Φ8)	4	
26	26116-080122	SCREW,HEXAGONHEADCAP	4	
27	HRA0100700A4	SCREW,HEXFLANGEHEADCAP	4	
28	HRA0100800A4	PIN,OIL	1	
36	HRA0100200A9	BEARING,MAIN->HRA0100201A3 HRA0100202A3	5	
39	HRA0100300A9	BEARING,CRANKSHAFT THRUST	2	

FIG E002 A2300N2-ATC(20C-47HP)	GEAR CASE	Year/Month 2020/02

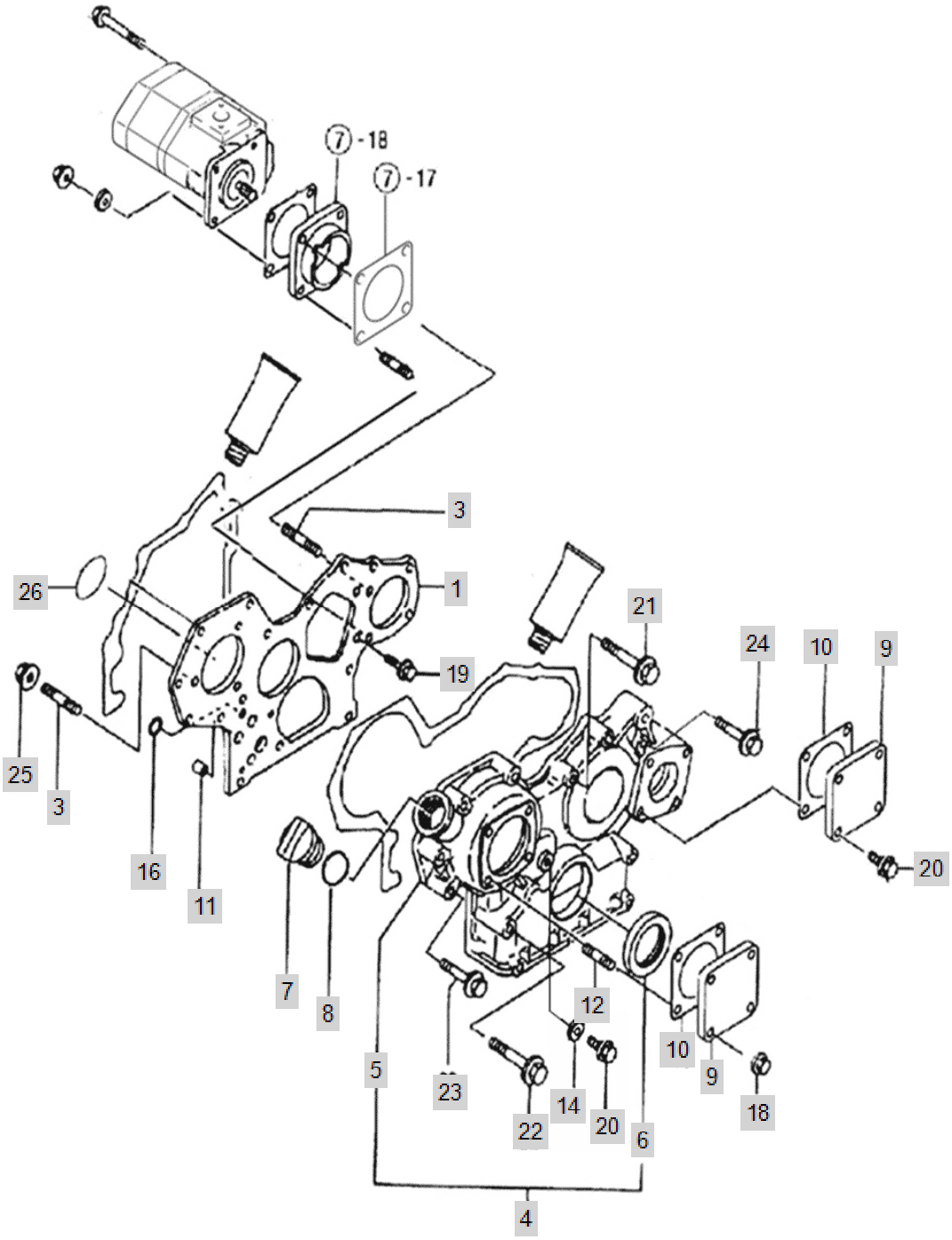

FIG E002 A2300N2-ATC(20C-47HP)	GEAR CASE	Year/Month 2020/02

KeyNo.	Part Number	Part Name	Quantity	Other
1	HRA020010DC2	PLATE, GEAR COVER	1	
3	HM02380000A4	STUD	4	
4	EA00000527C	COVER,FRONT	1	
5	EA00000413B	COVER,FRONT	1	
6	HRC0200402B4	OIL SEAL (G)	1	
7	HC03470000B4	CAP,FILTER	1	
8	24311-000320	O-RING, DYNAMIC (Φ32)	1	
9	HC01230000C4	COVER,ACCESSORYDRIVE	2	
10	HA02110000B4	GASKET,ACCDRIVECOVER	2	
11	HRA0201100A4	PIN,GUIDE	2	
12	26216-080162	STUD	4	
14	23414-080000	WASHER, PLAIN (Φ8)	1	
16	24311-000160	O-RING, DYNAMIC (Φ16)	2	
18	26367-080002	HEX FLANGE NUT (Φ8)	4	
19	26116-080162	SCREW,HEXAGONHEADCAP	3	
20	26106-080222	SCREW, HEX FLANGE HEAD CAP	5	
21	26106-080602	SCREW,HEXFLANGEHEADCAP	3	
22	26106-080902	SCREW,HEXFLANGEHEADCAP	2	
23	26106-080852	SCREW,HEXFLANGEHEADCAP	7	
24	26106-080502	SCREW,HEXFLANGEHEADCAP	1	
25	26367-080002	HEX FLANGE NUT (Φ8)	3	
26	24341-000500	O-RING, FIX (Φ50)	1	

FIG E003 A2300N2-ATC(20C-47HP)	FLYWHEEL HOUSING & OIL PAN	Year/Month 2020/02

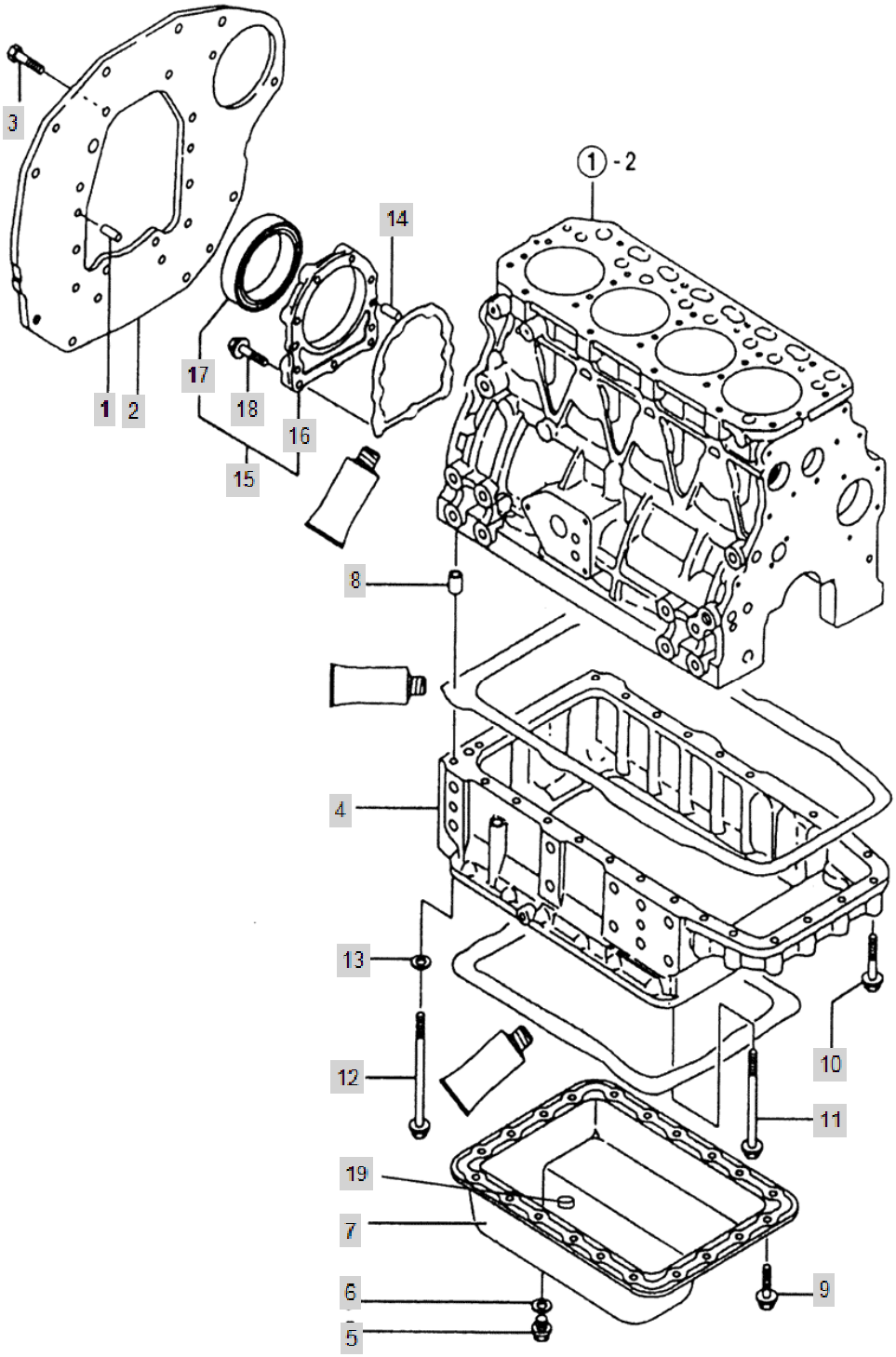

FIG E003 A2300N2-ATC(20C-47HP)	FLYWHEEL HOUSING & OIL PAN	Year/Month 2020/02

KeyNo.	Part Number	Part Name	Quantity	Other
1	22312-080160	PIN, DOWEL (8-16)	2	
2	HRA0300200B1	MOUNTING FLANGE	1	
3	26116-100202	HEX FLANGE BOLT(M10X1.5X20)	8	
4	HRA0300400B0	ADAPTER,OIL PAN	1	
5	23490-140002	Plug, Drain	1	
6	24311-000160	O-RING, DYNAMIC (Φ16)	1	
7	HRA0300700A1	COVER, LOWER	1	
8	HRA0300800A4	PIN,GUIDE	1	
9	26106-080122	Bolt, Hexa (8-12)	8	
10	26106-080502	SCREW,HEXFLANGEHEADCAP	8	
11	26106-081202	SCREW,HEXFLANGEHEADCAP	16	
12	26116-081202	SCREW,HEXAGONHEADCAP	2	
13	22217-080000	WASHER, SPRING (Φ 08)	2	
14	22312-080160	PIN, DOWEL (8-16)	2	
15	HRC0300800A9	OIL SEAL HOUSE Ass'y	1	
16	HRA0301401B2	OILSEAL CASE	1	
17	HRC0300802A4	OIL SEAL (F)	1	
18	26106-080302	HEX BOLT, FLANGE	9	
19	HF01470000A4	MAGNET	1	

FIG E004 A2300N2-ATC(20C-47HP)	CYLINDER HEAD & HEAD COVER	Year/Month 2020/02

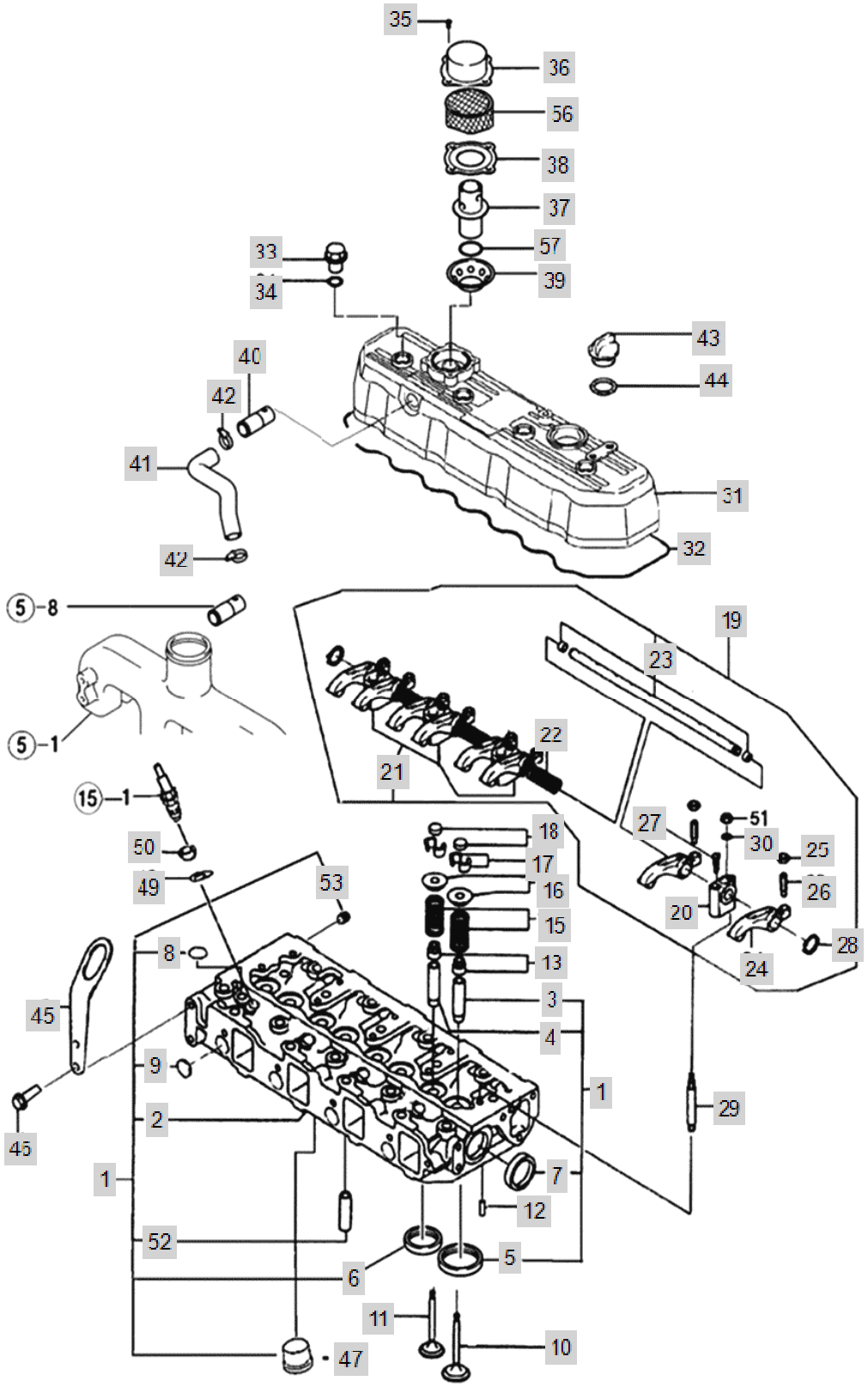

FIG E004 A2300N2-ATC(20C-47HP)	CYLINDER HEAD & HEAD COVER	Year/Month 2020/02

KeyNo.	Part Number	Part Name	Quantity	Other
1	HRU2201000B9	HEAD, CYLINDER -> HRU220C001B9	1	
2	HRU2201001B0	HEAD, CYLINDER	1	
3	HRA0400102B4	GUIDE,VALVESTEM	4	
4	HRA0400103B4	GUIDE,VALVESTEM	4	
5	HRA0400104B4	SEAT,ENGINEINTAKEVALVE	4	
6	HRA0400105B4	SEAT,ENGINE EXHAUST VALVE	4	
7	27241-400000	PLUG (D40)	2	
8	27241-220000	PLUG,EXPANSION	4	
9	27241-220000	PLUG,EXPANSION	4	
10	HRA0400200A4	VALVE,INTAKE	4	
11	HRA0400300A4	VALVE,EXHAUST	4	
12	22312-040100	PIN, DOWEL (4-10)	2	
13	HA03070000A4	SEAL,VALVESTEM	8	
15	HRA0400700A4	SPRING,VALVE	8	
16	HRA0400800A4	RETAINER,VALVESPRING	8	
17	HRA0400900A4	COTTER,VALVE	16	
18	HK03680000B4	CAP,VALVE	8	
19	HRA0401100B2	LEVER,ROCKER	1	
20	HRA0401200A4	SUPPORT,ROCKERLEVER	1	
21	HRA0401300A4	SUPPORT,ROCKERLEVER	3	
22	HRA0401400A4	SPRING,COMPRESSION	3	
23	HRA0401500A2	SHAFT,ROCKERLEVER	1	
24	HRA0401600A4	LEVER,ROCKER	8	
25	AF02110000E4	SCREW,RKRLEVERADJUSTING	8	
26	HH05280000A4	NUT,VALVEADJUSTING	8	
27	26921-080102	SCREW,SLOTTEDSET	1	
28	22242-000190	SNAP RING, SHAFT (Φ 19)	2	
29	HRA0401800A4	STUD	4	
30	22117-120000	WASHER, PLAIN (Φ 12)	4	
31	HRA0402300B0	COVER,VALVE	1	
32	HRA0402400B3	GASKET,VALVECOVER	1	
33	HA03520000B4	NUT,HEXAGONCAP	4	
34	24311-000140	O-RING, DYNAMIC (Φ14)	4	
35	26587-040102	SCREW,FILLISTERHEADCAP	4	
36	HRA0403600A4	COVER,BREATHER	1	
37	HRA0403700A4	Valve, Pressure Relief	1	
38	HRA0403800A4	GASKET,BREATHER	1	
39	HRA0403900A4	PLATE,BREATHERADJUSTING	1	
40	HRA0404000A4	TUBE,BREATHER	1	
41	HRA0404100C3	HOSE, BREATHER	1	
42	23080-021000	CLAMP,VBAND	2	
43	HC03470000B4	CAP,FILTER	1	
44	24311-000320	O-RING, DYNAMIC (Φ32)	1	
45	HK03530000A4	BRACKET,LIFTING	1	
46	26106-080162	SCREW,HEXFLANGEHEADCAP	2	

FIG E004 A2300N2-ATC(20C-47HP)	CYLINDER HEAD & HEAD COVER	Year/Month 2020/02

KeyNo.	Part Number	Part Name	Quantity	Other
47	HRU0404000A3	CHAMBER,INJECTION	4	
49	HRA0404900A4	SEAL,INJECTOR	4	
50	HRA0405000A4	SPACER, FUEL INJECTOR	4	
51	HA03180000B4	NUT,REGULARHEXAGON	4	
53	23871-010000	PLUG	1	
56	HC03720000C4	BAFFLE	1	
57	24341-000160	O-RING, FIX (Φ16)	1	

FIG E005 A2300N2-ATC(20C-47HP)	INTAKE MANIFOLD	Year/Month 2020/02

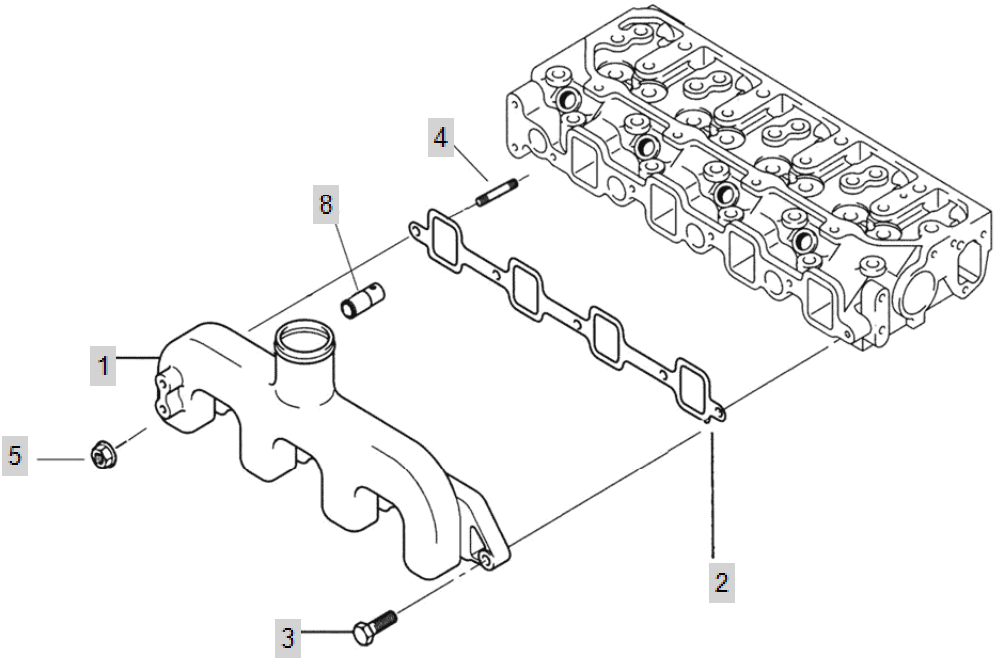

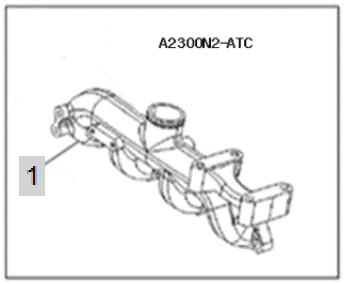

FIG E005 A2300N2-ATC(20C-47HP)	INTAKE MANIFOLD	Year/Month 2020/02

KeyNo.	Part Number	Part Name	Quantity	Other
1	HRC7000900A1	MANIFOLD, AIR INTAKE	1	
2	HRA0500200A3	GASKET,INTAKE MANIFOLD	1	
3	26106-080302	HEX BOLT, FLANGE	4	
4	26216-080352	BOLT, STUD 8 X 35	1	
5	26367-080002	HEX FLANGE NUT (Φ8)	1	
8	HRA0404000A4	TUBE,BREATHER	1	

FIG E006-1 A2300N2-ATC(20C-47HP)	BRACKET, COMPRESSOR	Year/Month 2020/02

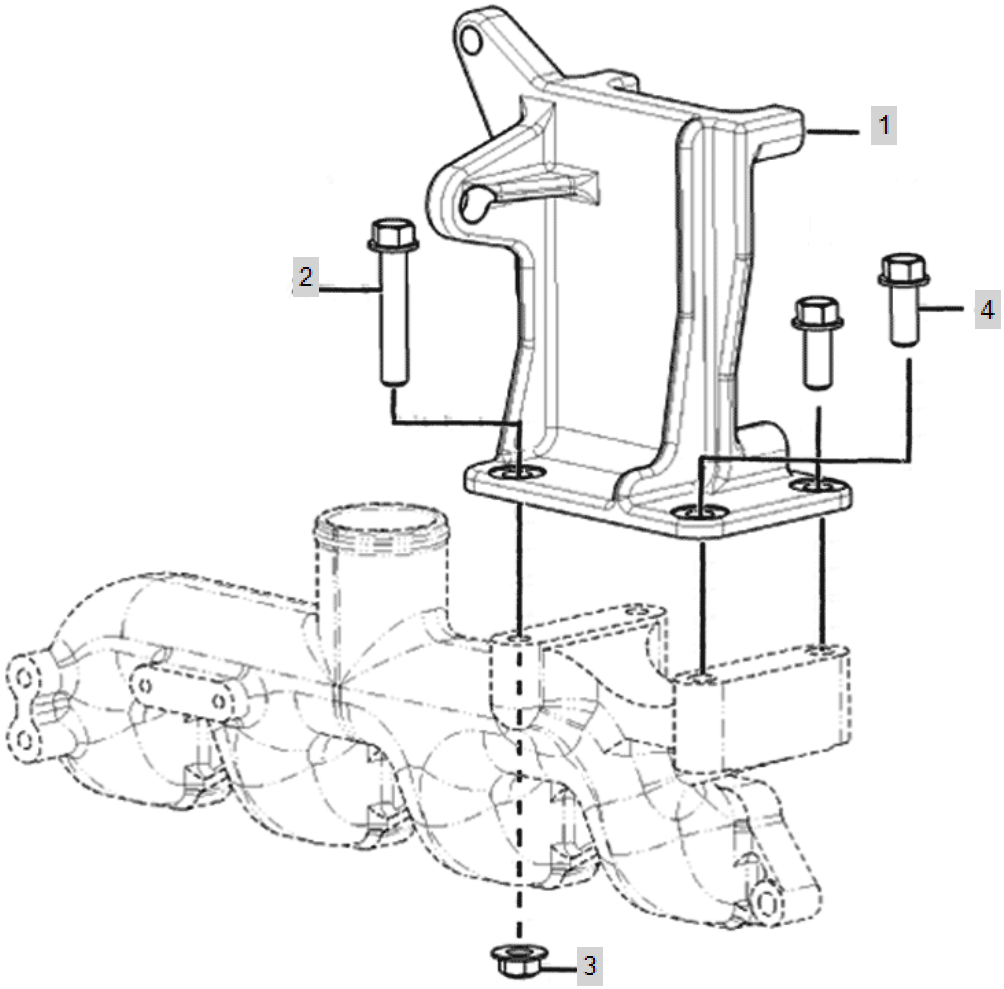

FIG E006-1 A2300N2-ATC(20C-47HP)	BRACKET, COMPRESSOR	Year/Month 2020/02

KeyNo.	Part Number	Part Name	Quantity	Other
1	TA00025553A	BRACKET COMPRESSOR	1	
2	26106-100552	BOLT	1	
3	26367-100002	NUT,HEXAGONFLANGE	1	
4	26106-100252	SCREW,HEXFLANGEHEADCAP	2	

FIG E007 A2300N2-ATC(20C-47HP)	EXHAUST MANIFOLD & SILENCER	Year/Month 2020/02

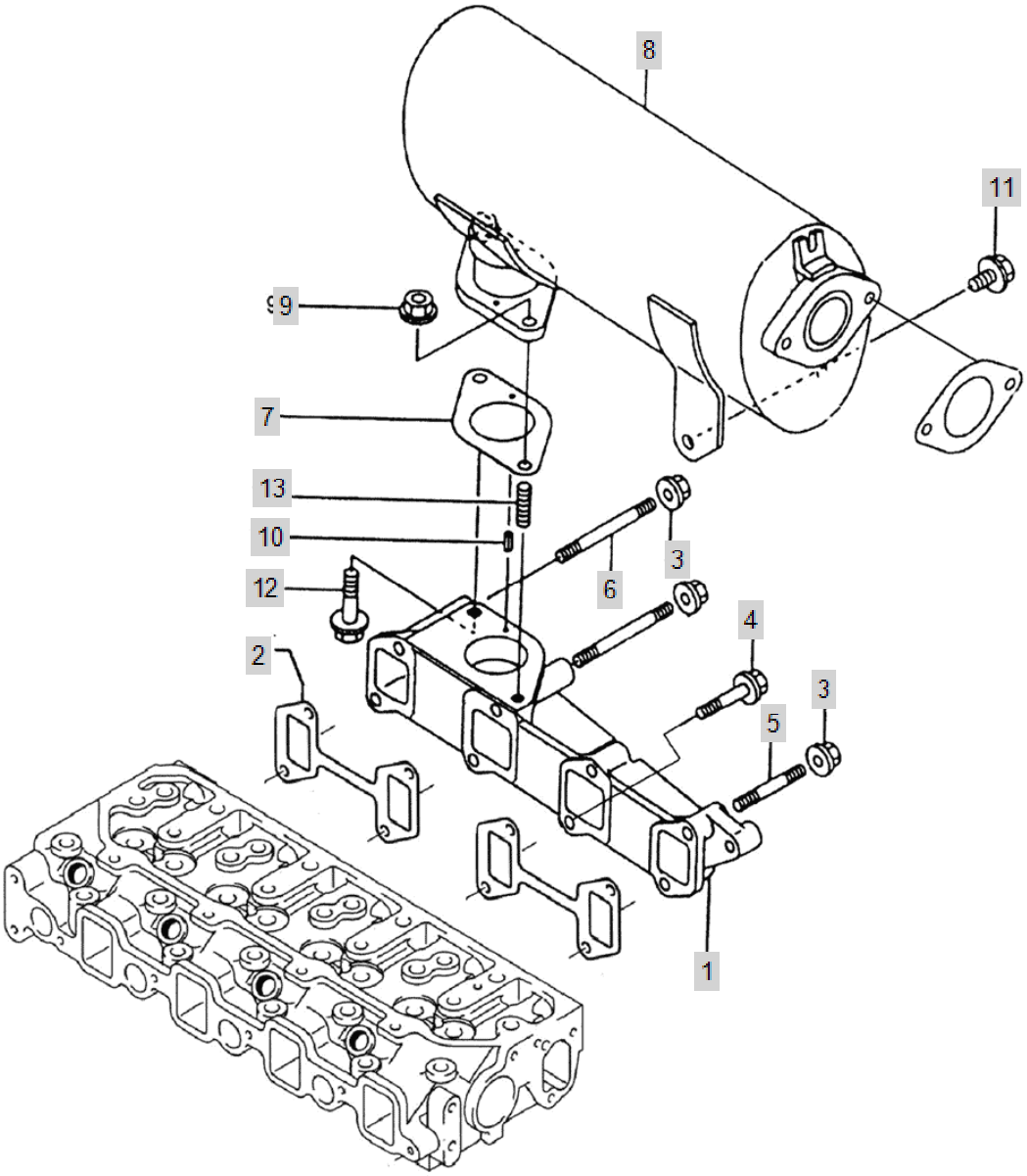

FIG E007 A2300N2-ATC(20C-47HP)	EXHAUST MANIFOLD & SILENCER	Year/Month 2020/02

KeyNo.	Part Number	Part Name	Quantity	Other
1	HRA0600100A1	MANIFOLD,EXHAUST	1	
2	HRA0600200A3	GASKET,EXHAUSTMANIFOLD	2	
3	26367-080002	HEX FLANGE NUT (Φ8)	4	
4	26106-080452	HEX FLANGE BOLT 8X45	4	
5	26216-080502	BOLT, STUD 8 ×50	2	
6	26216-080802	STUD	2	
7	HRA0600700A4	GASKET,MUFFLER	1	
8	EA00001838A	MUFFLER	1	
9	26367-080002	HEX FLANGE NUT (Φ8)	1	
10	22351-040012	PIN, SPRING (4-01)	1	
11	26106-080162	SCREW,HEXFLANGEHEADCAP	1	
12	26106-080382	BOLT	1	
13	26216-080222	Bolt, Stud (8-22)	1	

FIG E008 A2300N2-ATC(20C-47HP)	CAM SHAFT & DRIVING GEAR	Year/Month 2020/02

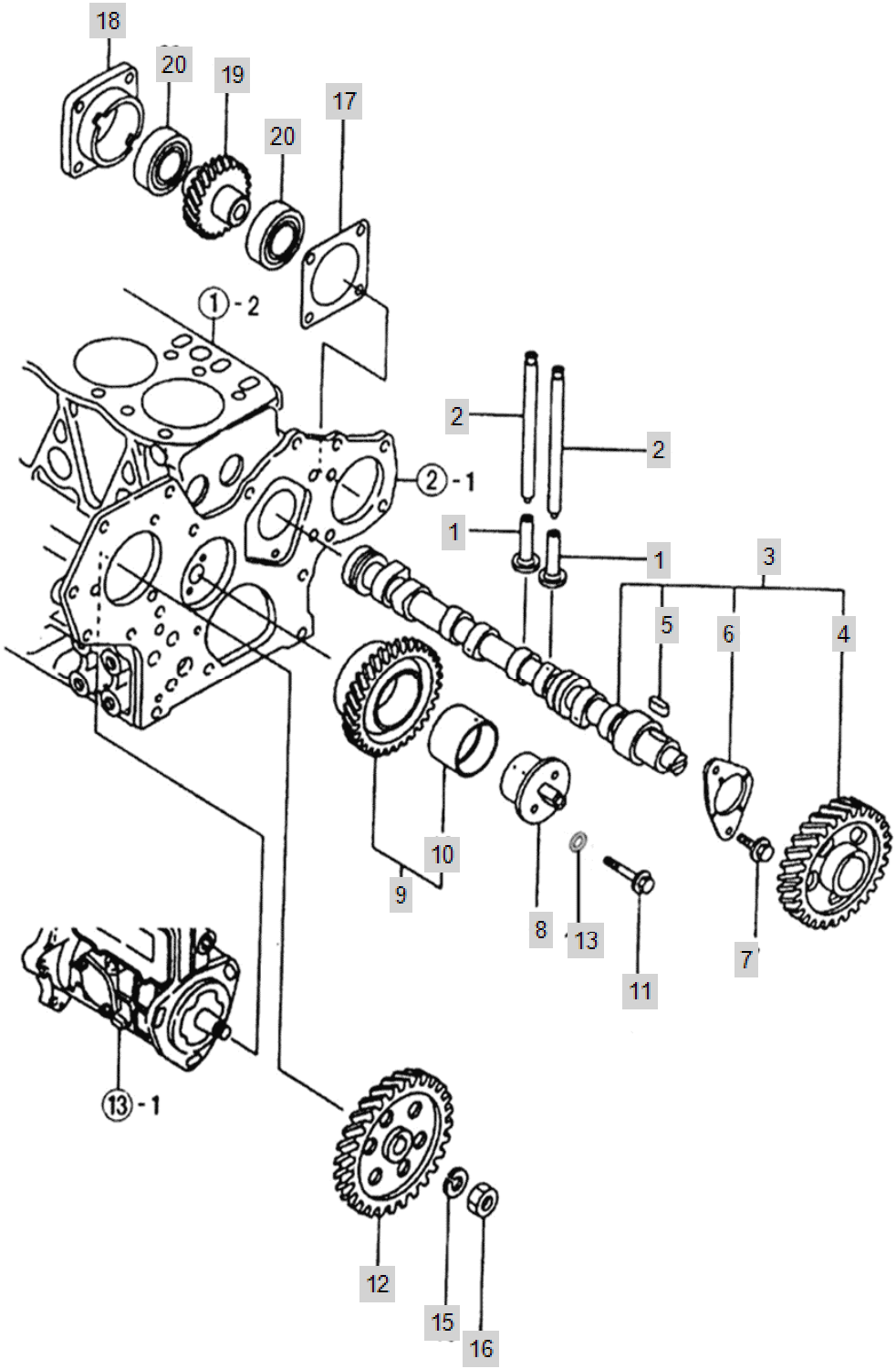

FIG E008 A2300N2-ATC(20C-47HP)	CAM SHAFT & DRIVING GEAR	Year/Month 2020/02

KeyNo.	Part Number	Part Name	Quantity	Other
1	HH08060000B4	TAPPET,VALVE	8	
2	HRA0700200B4	ROD,PUSH	8	
3	HRA0700300B9	CAM SHAFT ASSY	1	
4	HRA0700302A3	GEAR,CAMSHAFT	1	
5	22512-070140	KEY, SLIDING (07-14)	1	
6	HRA0700304A4	Bearing, Camshaft Thrust	1	
7	26106-080162	SCREW,HEXFLANGEHEADCAP	2	
8	EA00000848B	SHAFT, IDLER	1	
9	HRA0700600A3	GEAR,IDLER	1	
10	HH08120000A4	BUSH	1	
11	HRU0700700A4	BOLT,IDLESHAFT	2	
12	HRA070080DB3	GEAR,FUELPUMP	1	
13	22217-080000	WASHER, SPRING (Φ 08)	2	
15	22217-120000	WASHER, SPRING (Φ 12)	1	
16	26716-120002	BOLT,CYLINDER HEAD(B)	1	
17	HK02350000A4	GASKET,ACCDRIVECOVER	1	
18	HK02340000B3	HOUSING, POWER TAKEOFF	1	
19	HRA4000300A3	HYD.PUMP GEAR	1	
20	24101-060064	Bearing, Ball (#6006)	2	

FIG E009 A2300N2-ATC(20C-47HP)	CRANK SHAFT & PISTON	Year/Month 2020/02

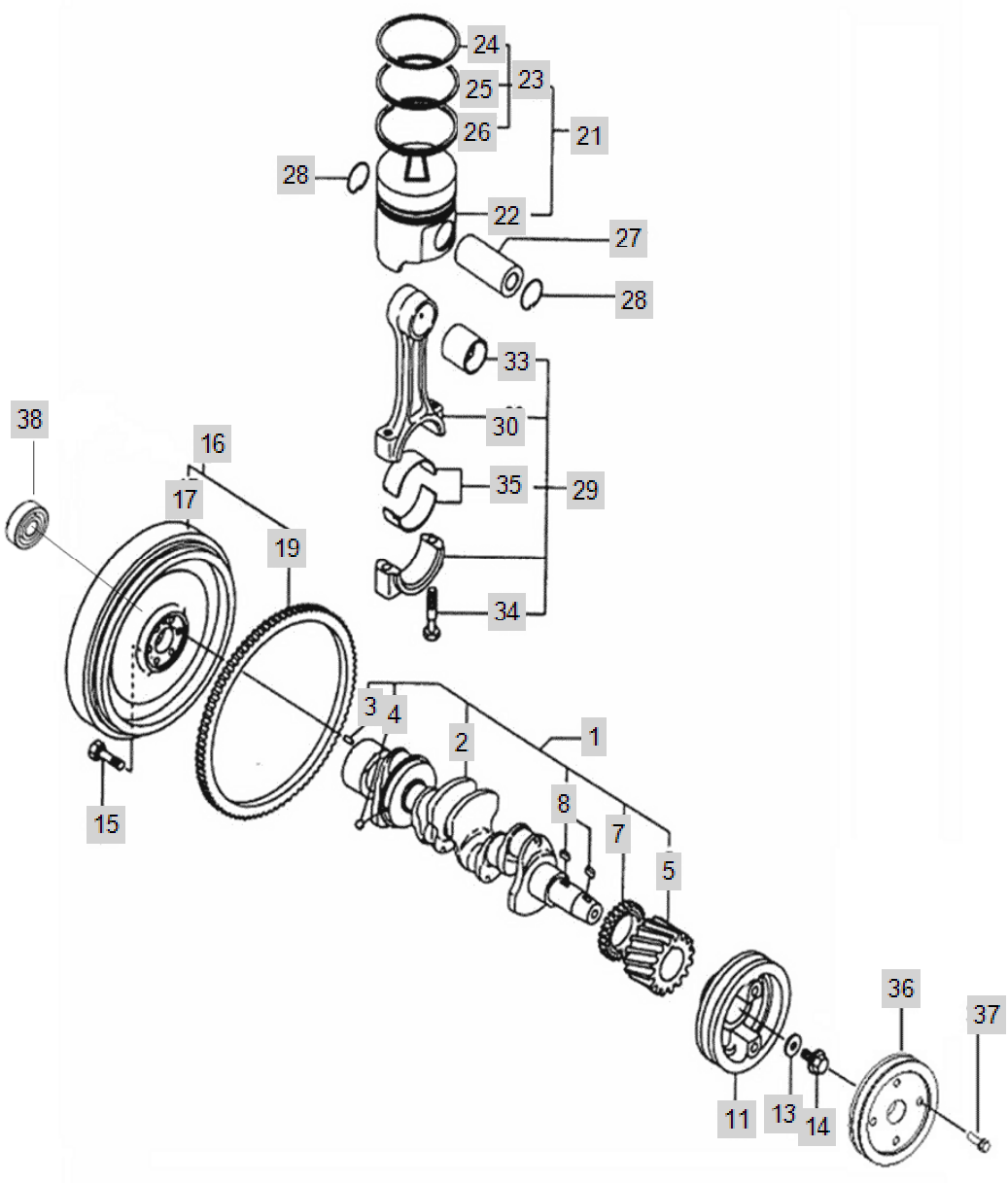

FIG E009 A2300N2-ATC(20C-47HP)	CRANK SHAFT & PISTON	Year/Month 2020/02

KeyNo.	Part Number	Part Name	Quantity	Other
1	HRA080010KD9	CRANKSHAFT	1	
2	HRA0800101D0	CRANKSHAFT	1	
3	22312-080160	PIN, DOWEL (8-16)	1	
4	24190-080002	Ball, Steel	1	
5	HRA0800200A3	GEAR,CRANK SHAFT	1	
7	HRA0800400A3	GEAR,BALANCERDRIVEN	1	
8	22512-070140	KEY, SLIDING (07-14)	2	
11	HRU0020100B2	PULLEY,CRANKSHAFT	1	
13	HRA0800800A4	WASHER,PLAIN	1	
14	HH09090000A4	SCREW,HEXFLANGEHEADCAP	1	
15	HRC0801000A4	SCREW,HEXAGONHEADCAP	6	
16	HRA084000DB9	FLYWHEEL ASS'Y(IND-4CYL)	1	
17	HRA084001DA1	FLYWHEEL(IND-4CYL)	1	
19	HA07070000A2	RING GEAR,FLYWHEEL	1	
21	HRA0801300A9	PISTON ASS'Y	4	
22	HRA0801301B1	PISTON,ENGINE	4	
23	HRA0801302B9	RINGSET,PISTON	4	
24	HRA0801303A4	RING,1STCOMPRESSIONPISTON	4	
25	HRA0801304B4	RING,2NDCOMPRESSIONPISTON	4	
26	HRA0801305B4	RING,OILPISTON	4	
27	HK27150000A4	PIN,PISTON	4	
28	HA08070000A4	RING,RETAINING	8	
29	HRA0801600A9	ROD,ENGINECONNECTING	4	
30	HRA0801601A2	ROD,ENGINECONNECTING	4	
33	HRA0801603A4	BUSHING	4	
34	HRA0801602A4	SCREW,HEXAGONHEADCAP	8	
35	HRA0801700A3	BEARING,CONNECTINGROD	8	
36	HRC7001500A3	V PULLEY	1	
37	26013-080302	HEX BOLT W/WASHER	4	
38	24104-063024	BALL BEARING (#6302UU)	1	

FIG E010 A2300N2-ATC(20C-47HP)	BALANCER	Year/Month 2020/02

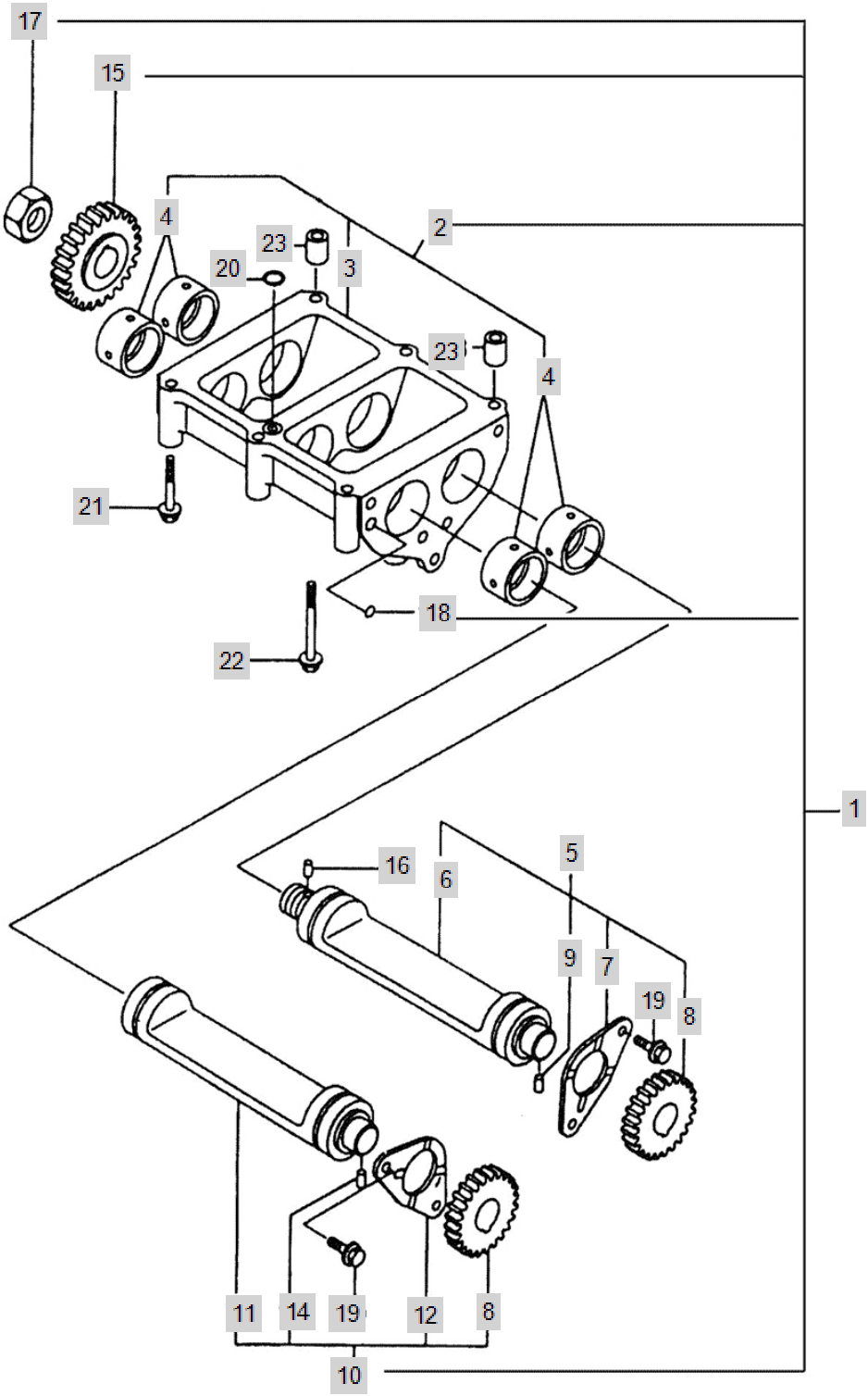

FIG E010 A2300N2-ATC(20C-47HP)	BALANCER	Year/Month 2020/02

KeyNo.	Part Number	Part Name	Quantity	Other
1	HRA1000100A1	BALANCER	1	
2	HRA1000101A9	BALANCER CASE ASS'Y	1	
3	HRA1000101A0	CASE,BALANCER	1	
4	HRA1000102A3	BUSH,BALANCERSHAFT	4	
5	HRA1000200A9	SHAFTASS'Y(A),BALANCER	1	
6	HRA1000201A3	SHAFT(A),BALANCER	1	
7	HRA1000202A4	BEARING,THRUST	1	
8	HRA100203A3	GEAR B, BALANCER	2	
9	22312-060080	PIN, DOWEL (6-08)	1	
10	HRA1000300A9	SHAFTASS'Y(B),BALANCER	1	
11	HRA1000301A3	SHAFT(B),BALANCER	1	
12	HRA1000202A4	BEARING,THRUST	1	
14	22312-060080	PIN, DOWEL (6-08)	1	
15	HRA1000204A3	GEAR(A),BALANCER	1	
16	22312-060080	PIN, DOWEL (6-08)	1	
17	HRA1000500A4	NUT,BALANCERGEAR(A)	1	
18	24190-080002	Ball, Steel	2	
19	26106-080162	SCREW,HEXFLANGEHEADCAP	4	
20	24311-000140	O-RING, DYNAMIC (Φ14)	1	
21	26106-080652	SCREW,HEXFLANGEHEADCAP	4	
22	26106-080752	SCREW,HEXFLANGEHEADCAP	2	
23	HRA1000700A4	PIN,GUIDE	2	

FIG E011-1 A2300N2-ATC(20C-47HP)	LUB. OIL SYSTEM	Year/Month 2020/02

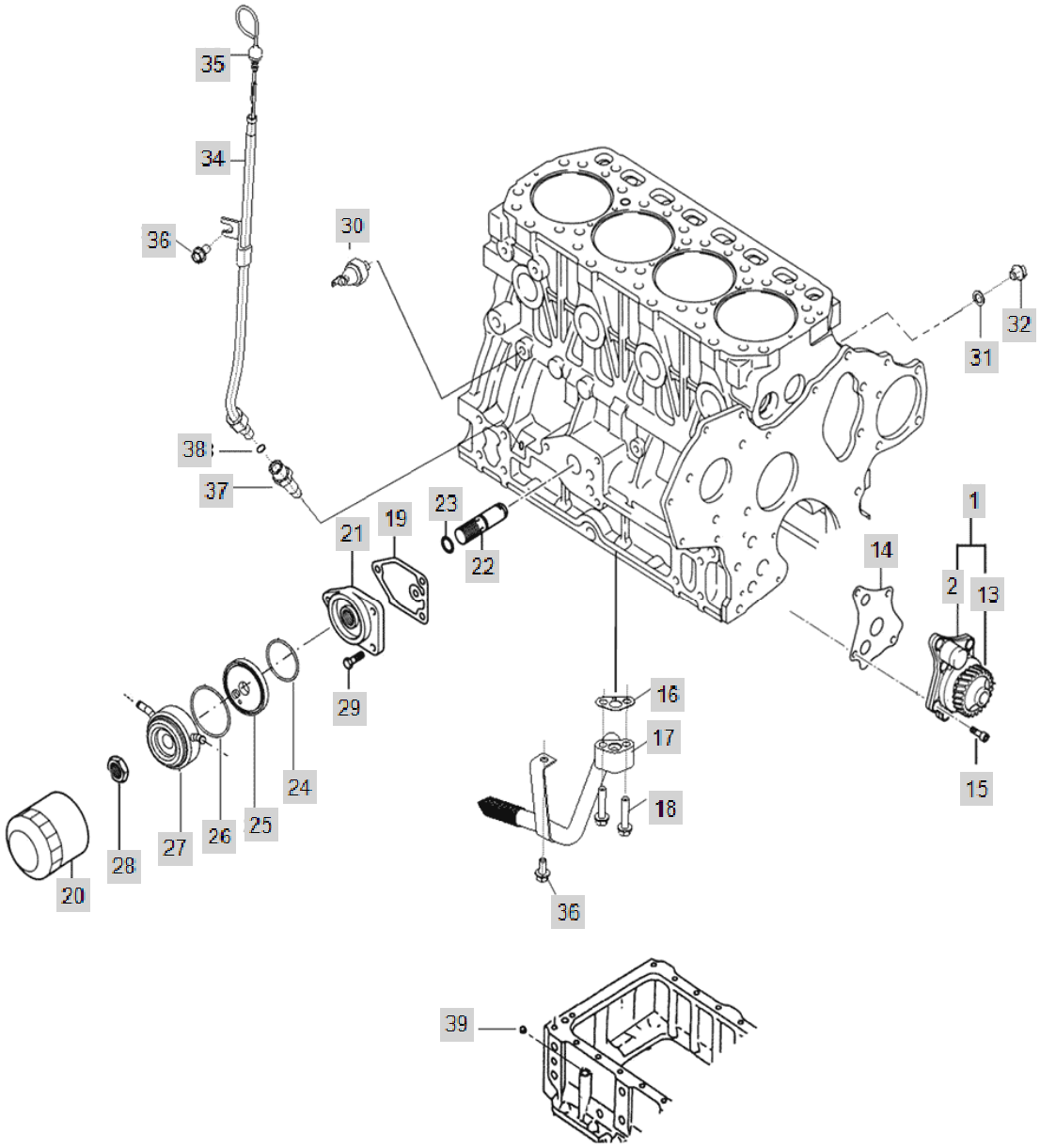

FIG E011-1 A2300N2-ATC(20C-47HP)	LUB. OIL SYSTEM	Year/Month 2020/02

KeyNo.	Part Number	Part Name	Quantity	Other
1	HRA1100109A9	PUMP, LUBRICATING OIL	1	
2	HRA1100100A2	PUMP,LUBRICATINGOIL	1	
13	HRA1100112A3	GEAR,LUBRICATINGOILPUMP	1	
14	HRA1100600A4	GASKET,LUBOILPUMP	1	
15	26450-060252	SCREW,SOCKETHEADCAP	4	
16	HRA1100700A4	GASKET,OILPAN	1	
17	HRA1100800A2	PIPEASSY,OILINTAKE	1	
18	26106-080352	SCREW,HEXFLANGEHEADCAP	2	
19	HRA1101000A4	GASKET,FILTERHEAD	1	
20	HRA1102000A3	FILTER, ENGINE OIL	1	
21	HRA1100900B3	HEAD,LUBOILFILTER	1	
22	HRC5000700B4	BOLT,OILPRESSUREADJUSTING	1	
23	24311-000160	O-RING, DYNAMIC (Φ16)	1	
24	24321-000600	SEAL,ORING	1	
25	HRC5000400A4	SPACER,COOLER	1	
26	24321-000750	SEAL,ORING	1	
27	HRC5000600A2	COOLER,ENGINEOIL	1	
28	HRA1101107A4	NUT,OILFILTER	1	
29	26106-080202	SQR FLANGE BOLT	3	
30	HA09250000A3	SWITCH,OILPRESSURE	1	
31	23414-100000	PLAIN WASHER (D10)	2	
32	23887-100002	SCREW,HEXAGONHEADCAP	2	
34	EA00002292A	TUBE, OIL GAUGE	1	
35	EA00002293A	OIL GAUGE	1	
36	26106-080162	SCREW,HEXFLANGEHEADCAP	1	
37	HRT0300200A4	GUIDE,DIPSTICK	1	
38	24311-000070	O-RING, DYNAMIC (Φ7)	1	
39	HRT0300500A4	PLUG,EXPANSION	1	

FIG E011-2 A2300N2-ATC(20C-47HP)	LUB. OIL SYSTEM	Year/Month 2020/02

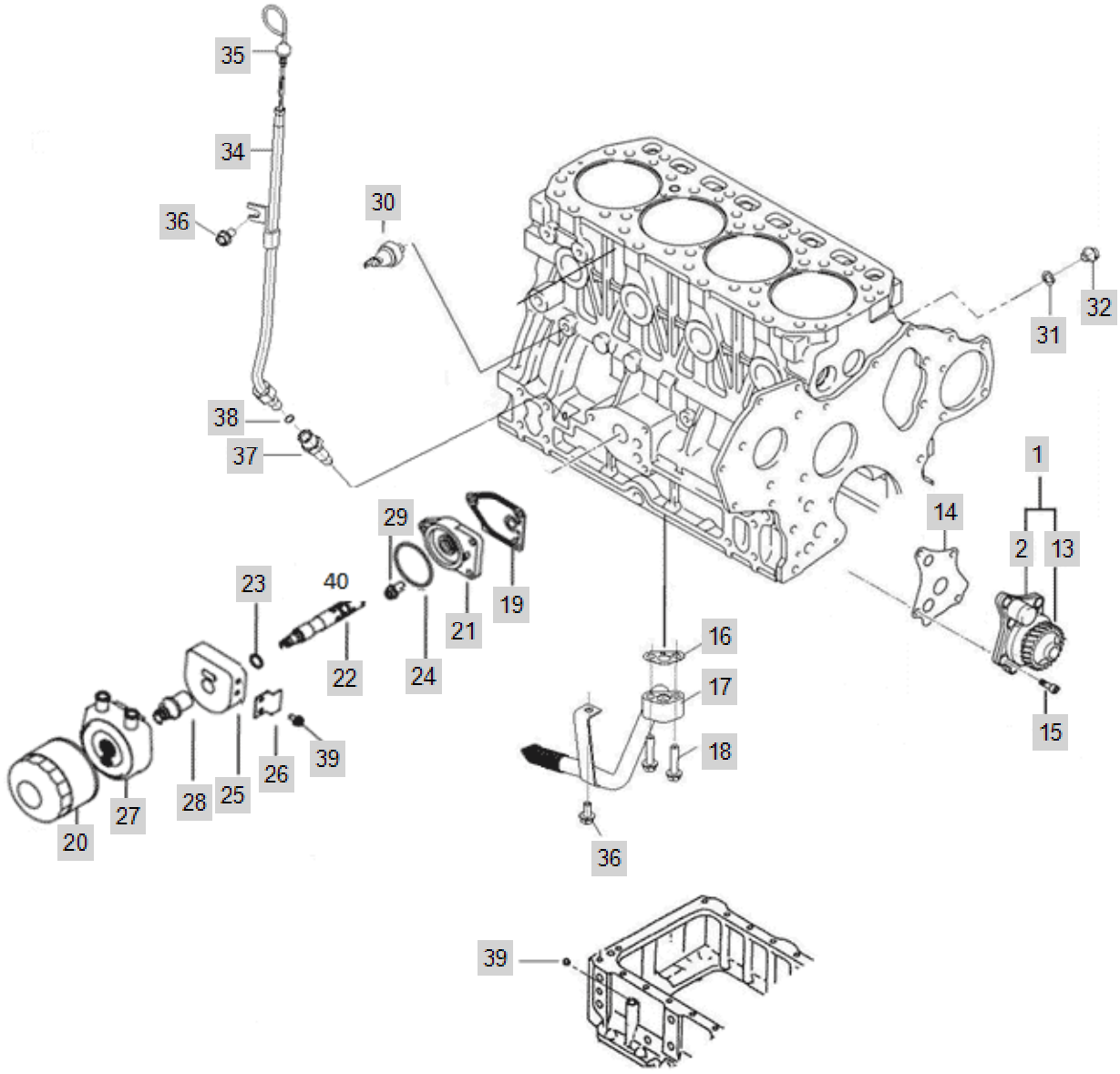

FIG E011-2 A2300N2-ATC(20C-47HP)	LUB. OIL SYSTEM	Year/Month 2020/02

KeyNo.	Part Number	Part Name	Quantity	Other
1	HRA1100109A9	PUMP, LUBRICATING OIL	1	
2	HRA1100100A2	PUMP,LUBRICATINGOIL	1	
13	HRA1100112A3	GEAR,LUBRICATINGOILPUMP	1	
14	HRA1100600A4	GASKET,LUBOILPUMP	1	
15	26450-060252	SCREW,SOCKETHEADCAP	4	
16	HRA1100700A4	GASKET,OILPAN	1	
17	HRA1100800A2	PIPEASSY,OILINTAKE	1	
18	26106-080352	SCREW,HEXFLANGEHEADCAP	2	
19	HRA1101000A4	GASKET,FILTERHEAD	1	
20	EA00004647A	OIL FILTER	1	
21	HRA1100900B3	HEAD,LUBOILFILTER	1	
22	EA00002852A	PRESSURE CONTORL VALVE	1	
23	24311-000160	O-RING, DYNAMIC (Φ16)	1	
24	24321-000600	SEAL,ORING	1	
25	EA00002818A	SPACER(PRESSURE C.V)	1	
26	EA00002900A	REINFORCEMENT BRACKET(COOLER SPACER)	1	
27	EA00000309A	OIL COOLER ASSY	1	
28	EA00000310A	BOLT COOLER, OIL	1	
29	26106-080202	SQR FLANGE BOLT	3	
30	HA09250000A3	SWITCH,OILPRESSURE	1	
31	23414-100000	PLAIN WASHER (D10)	2	
32	23887-100002	SCREW,HEXAGONHEADCAP	2	
34	EA00005162A	FINISH ASSEMBLING OPTION	1	
35	EA00005163A	DIP STICK	1	
36	26106-080162	SCREW,HEXFLANGEHEADCAP	1	
37	HRT0300200A4	GUIDE,DIPSTICK	1	
38	24311-000070	O-RING, DYNAMIC (Φ7)	1	
39	HRT0300500A4	PLUG,EXPANSION	1	
40	26106-060122	HEX BOLT (6-12)	2	

FIG E012 A2300N2-ATC(20C-47HP)	COOLING SYSTEM	Year/Month 2020/02

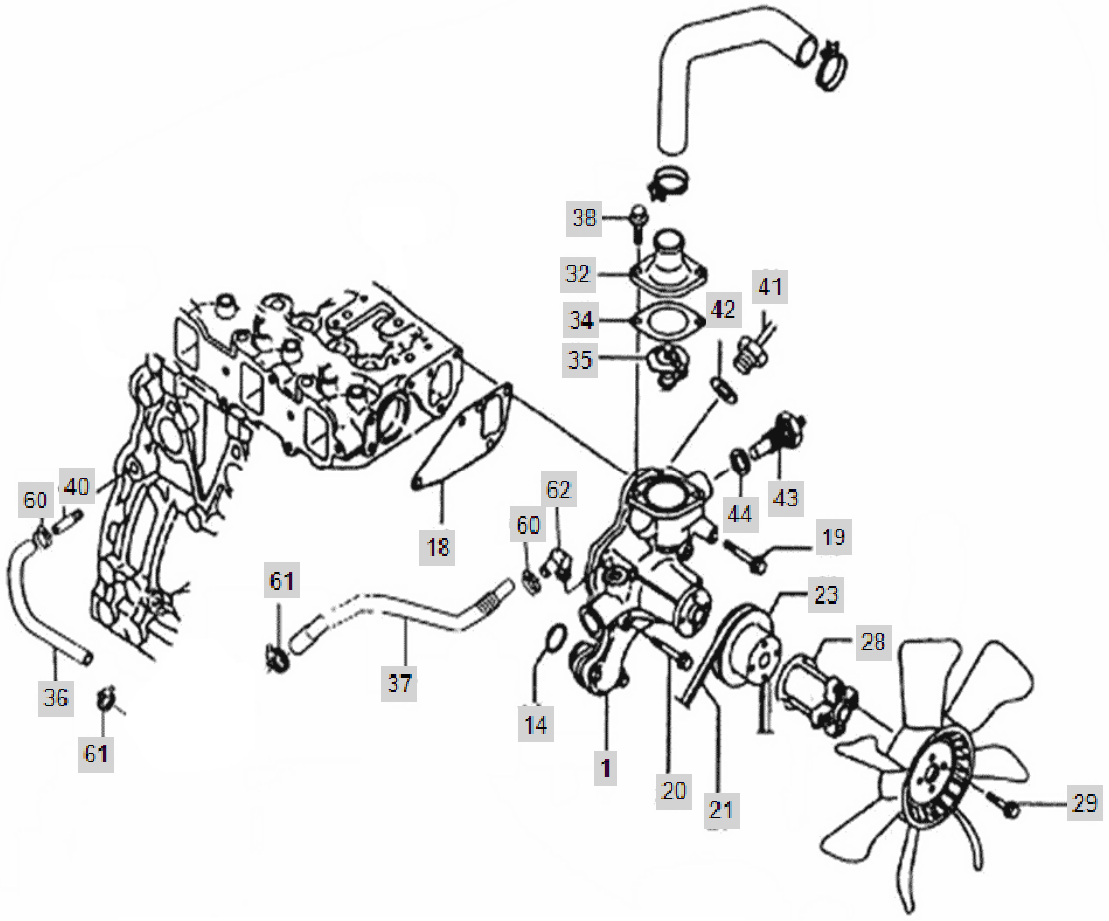

FIG E012 A2300N2-ATC(20C-47HP)	COOLING SYSTEM	Year/Month 2020/02

KeyNo.	Part Number	Part Name	Quantity	Other
1	HRA1200100D1	COOLANT PUMP ASSY	1	
14	24341-000280	O-RING, FIX (Φ28)	1	
18	HRA1200200A3	GASKET,WATERPUMP	1	
19	26106-080552	HEX FLANGE BOLT (D80)	3	
20	26106-080602	SCREW,HEXFLANGEHEADCAP	1	
21	HRA1200600A4	BELT,V(A40.5")	1	
23	HK10120000A4	PULLEY,FAN	1	
28	EA00000543A	SPACER(FAN)	1	
29	26106-080302	HEX BOLT, FLANGE	4	
32	HC09160000B4	COVER, THERMOSTAT	1	
34	HA10670000A4	GASKET,WATER PUMP -> HA10670000B4	1	
35	HK10030000A3	THERMOSTAT	1	
36	HRC1204600B4	HOSE,PLAIN	1	
37	HRC1204700B4	HOSE,PLAIN	1	
38	26106-080182	SCREW,HEXFLANGEHEADCAP	2	
40	HRC1204000A4	NIPPLE,PLAINPIPE	1	
41	HH12210000A3	SENSOR,GLOWPLUG	1	
42	23414-160000	WASHER,SEALING	1	
43	HH12190000A3	WATER TEMP SENSOR	1	
44	23414-100014	PACKING,COPPER	1	
60	23000-019000	Clip, Hose (Φ19)	2	
61	23000-022000	CLAMP,HOSE	2	
62	CEE2080000A4	ELBOW,PLAINUNION	1	

FIG E012-2 A2300N2-ATC(20C-47HP)	COOLING SYSTEM	Year/Month 2020/02

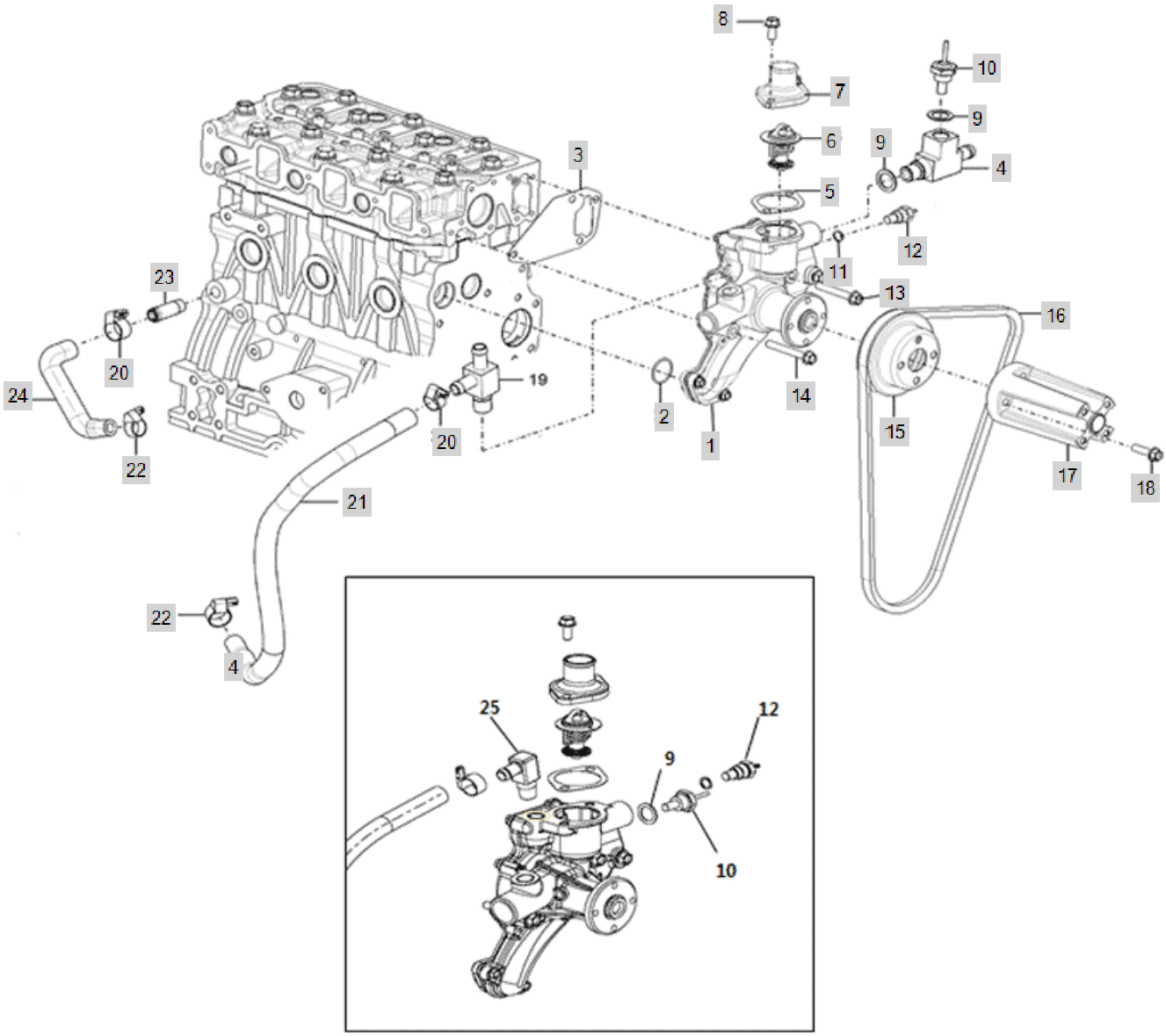

FIG E012-2 A2300N2-ATC(20C-47HP)	COOLING SYSTEM	Year/Month 2020/02

KeyNo.	Part Number	Part Name	Quantity	Other
1	EA00006114A	WATER PUMP ASS'Y	1	
1-1	EA00005801B	WATER PUMP ASS'Y	1	DELETE
2	24341-000280	O-RING, FIX (Φ28)	1	
3	HRA1200200A3	GASKET,WATERPUMP	1	
4	FLW5100000A3	T-Joint	1	
5	HA10670000B4	GASKET,THERMOSTAT	1	
6	HK10030000A3	THERMOSTAT	1	
7	HC09160000B4	COVER, THERMOSTAT	1	
8	26106-080182	SCREW,HEXFLANGEHEADCAP	2	
9	23414-160000	WASHER,SEALING	1	
10	HH12210000A3	SENSOR,GLOWPLUG	1	
11	23414-100014	PACKING,COPPER	1	
12	HH12190000A3	WATER TEMP SENSOR	1	
13	26106-080552	HEX FLANGE BOLT (D80)	3	
14	26106-080602	SCREW,HEXFLANGEHEADCAP	1	
15	HRU0140100A3	V-PULLEY	1	
16	EA00005549A	V-BELT(A40)	1	
17	EA00004968A	SPACER(COOLING FAN)	1	
18	26106-080352	SCREW,HEXFLANGEHEADCAP	4	
19	FLW5110000A3	T-Joint	1	
20	23000-025000	CLAMP,HOSE	2	
21	EA00002855A	COOLANT HOSE B, OIL COOLER	1	
22	23000-022000	CLAMP,HOSE	1	
23	HRC1204000A4	NIPPLE,PLAINPIPE	1	
24	EA00004503A	LUB COOLER HOSE(A)	2	
26	26736-160002	HEXNUT	1	

FIG E013 A2300N2-ATC(20C-47HP)	FUEL INJECTION PUMP	Year/Month 2020/02

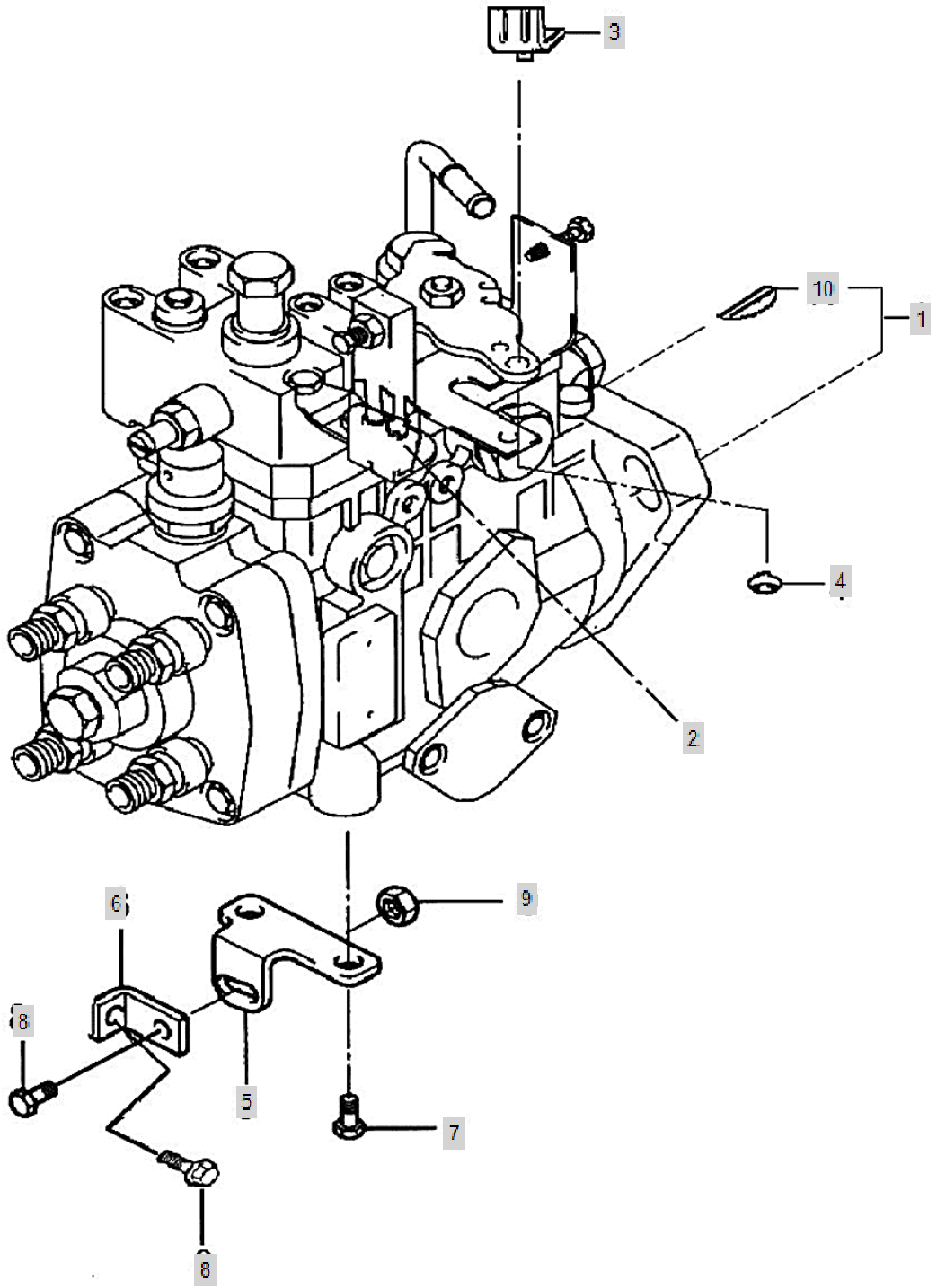

FIG E013 A2300N2-ATC(20C-47HP)	FUEL INJECTION PUMP	Year/Month 2020/02

KeyNo.	Part Number	Part Name	Quantity	Other
1	HRA130010DB1	FUEL INJECTION PUMP (A2300N2)	1	
2	HRA1300600A4	SUPPORT(AXLE LEVER)	1	
3	HRA1300700B4	HOOK(AXLE LEVER)	1	
4	22272-000050	RING, CIRCLIP (Φ 05)	1	
5	HRA130020DA4	BRACKET(B),PUMP	1	
6	HRA130030DA4	BRACKET(A),PUMP	1	
7	26116-100162	SCREW,HEXAGONHEADCAP	2	
8	26106-080162	SCREW,HEXFLANGEHEADCAP	2	
9	26367-080002	HEX FLANGE NUT (Φ8)	1	
10	HRA0702100A4	KEY,PLAINWOODRUFF	1	

FIG E014 A2300N2-ATC(20C-47HP)	FUEL INJECTION SYSTEM	Year/Month 2020/02

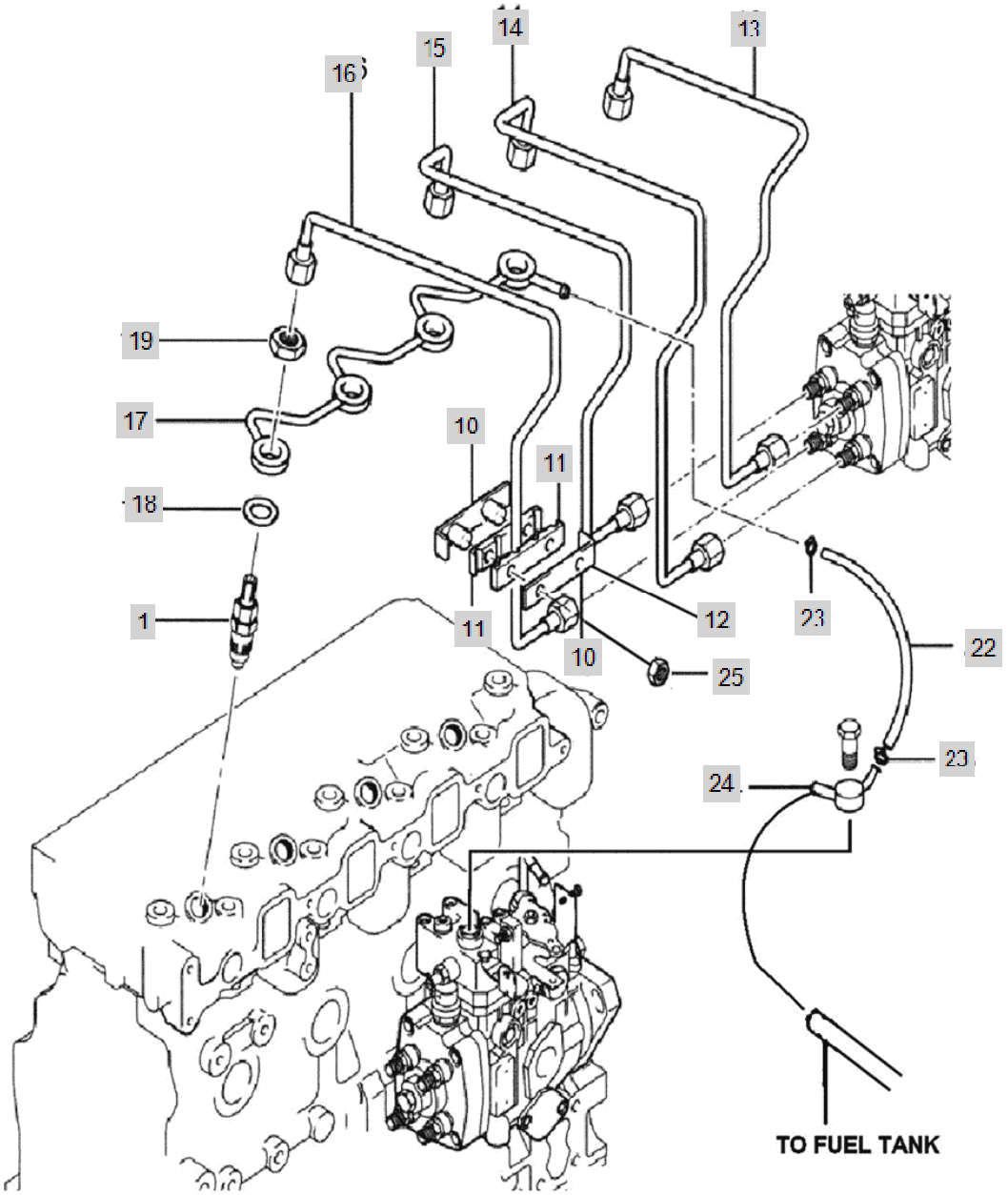

FIG E014 A2300N2-ATC(20C-47HP)	FUEL INJECTION SYSTEM	Year/Month 2020/02

KeyNo.	Part Number	Part Name	Quantity	Other
1	HK12020000A3	INJECTOR, FUEL	4	
10	HRA1502600B4	BRACKET,PIPE	1	
11	HRA1502700A4	RUBBER,BRACKET	2	
12	HRA1502800A4	CLAMP,TUBE	1	
13	HRA150050DB0	PIPE ASSY, FUEL SUPPLY A	1	
14	HRA150060DB0	PIPE ASSY, FUEL SUPPLY (B)	1	
15	HRA150070DBO	FUEL PIPE ASS'Y(C)	1	
16	HRA150080DB0	PIPE ASSY, FUEL SUPPLY D	1	
17	HRA1500900B3	PIPE ASSY, DRAIN	1	
18	HK13440000A4	GASKET,FUELMANIFOLD	4	
19	HK13450000A4	NUT,REGULARHEXAGON	4	
22	EA00000700A	TUBE, FUEL DRAIN	1	
23	23080-010000	CLAMP, V BAND	2	
24	HRA1502400B4	CONNECTOR,BANJO	1	
25	26367-060002	Nut, Hexa (Φ6)	2	

FIG E015-1 A2300N2-ATC(20C-47HP)	FUEL SYSTEM	Year/Month 2020/02

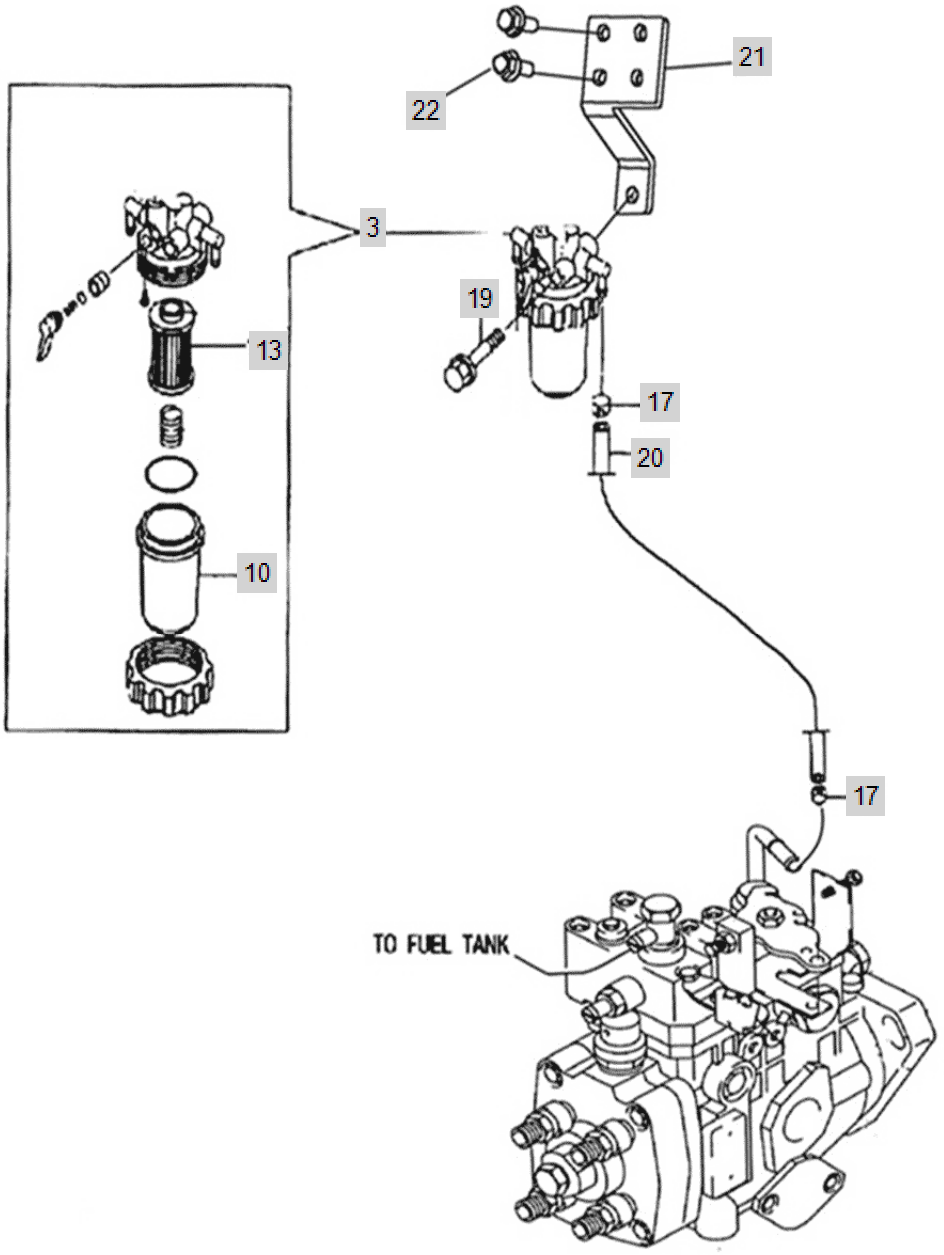

FIG E015-1 A2300N2-ATC(20C-47HP)	FUEL SYSTEM	Year/Month 2020/02

KeyNo.	Part Number	Part Name	Quantity	Other
3	HK13010000C2	FUEL FILTER ASSY	1	
10	HA13050000B4	FILTER CUP	1	
13	HA13040000A4	ELEMENT, FUEL FILTER	1	
17	23000-013000	Clip, Hose (Φ13)	2	
19	26106-080652	SCREW,HEXFLANGEHEADCAP	1	
20	EA00000721A	Hose, Fuel (Filter - Pump)	1	
21	HRA4100600B4	BRACKET,FILTER	1	
22	26106-080162	SCREW,HEXFLANGEHEADCAP	2	

FIG E015-2 A2300N2-ATC(20C-47HP)	FUEL SYSTEM(201801~)	Year/Month 2020/02

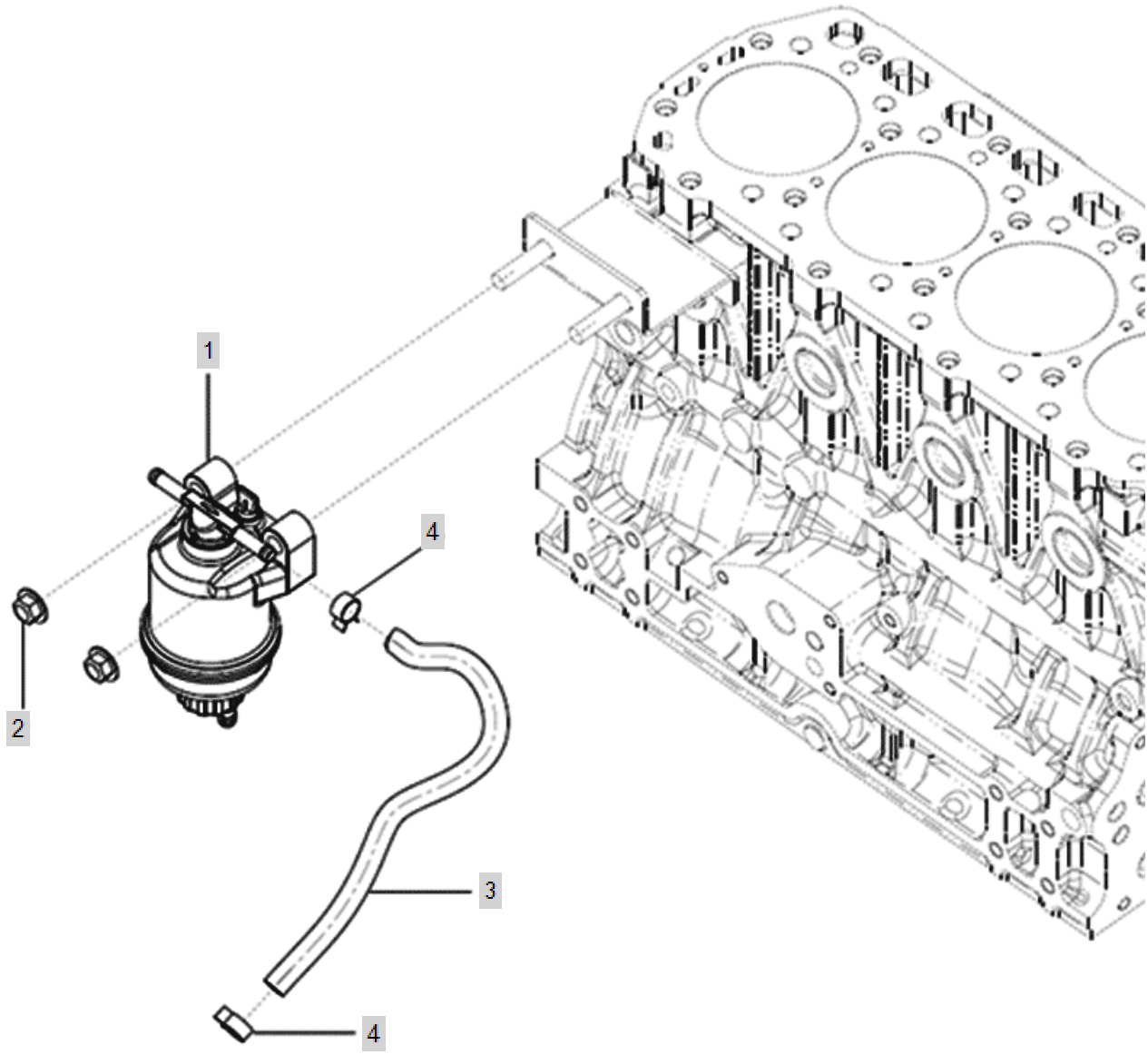

FIG E015-2 A2300N2-ATC(20C-47HP)	FUEL SYSTEM(201801~)	Year/Month 2020/02

KeyNo.	Part Number	Part Name	Quantity	Other
1	EA00005318A	FUEL FILTER	1	
2	26367-100002	NUT,HEXAGONFLANGE	2	
3	EA00000173A	HOSE, FUEL ASSY	1	
4	23000-013000	Clip, Hose (Φ13)	2	

FIG E016-1 A2300N2-ATC(20C-47HP)	STARTING MOTOR	Year/Month 2020/02

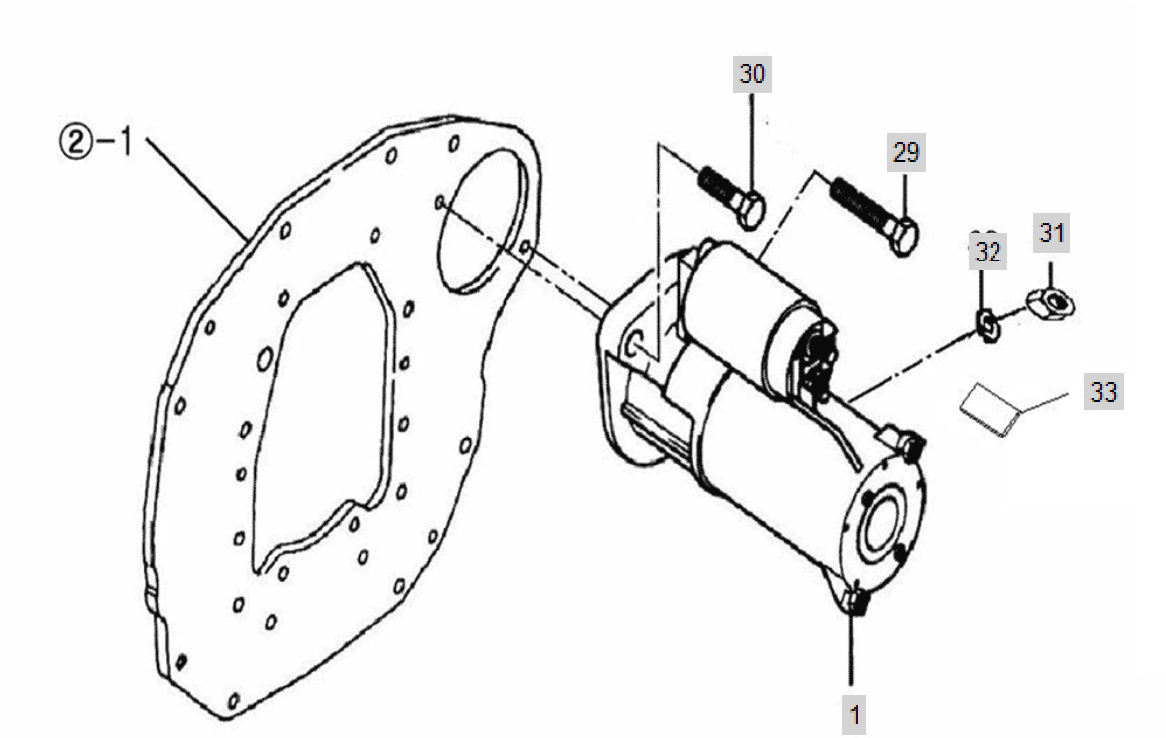

FIG E016-1 A2300N2-ATC(20C-47HP)	STARTING MOTOR	Year/Month 2020/02

KeyNo.	Part Number	Part Name	Quantity	Other
1	HRD1700100A1	STARTING MOTOR	1	
29	26116-120604		2	
30	26013-120282	SCREW,CAPTIVEWASHERCAP	1	
31	26716-080002	NUT,HEX (D8)	1	
32	22217-080000	WASHER, SPRING (Φ 08)	1	
33	EA00001429A	LAMP	1	

FIG E016-2 A2300N2-ATC(20C-47HP)	STARTING MOTOR	Year/Month 2020/02

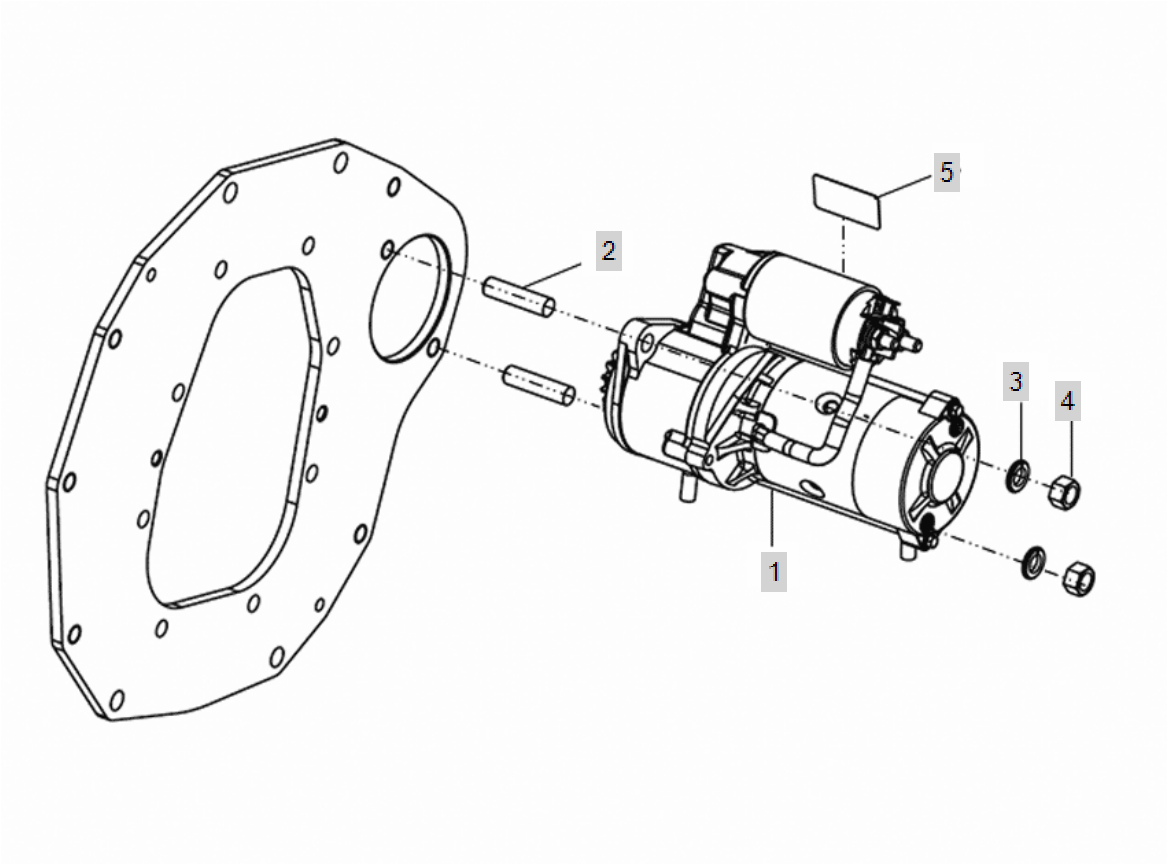

FIG E016-2 A2300N2-ATC(20C-47HP)	STARTING MOTOR	Year/Month 2020/02

KeyNo.	Part Number	Part Name	Quantity	Other
1	EA00004194B	STARTER	1	
2	26216-120302	STUDBOLT	2	
3	22217-120000	WASHER, SPRING (Φ 12)	2	
4	26716-120002	BOLT,CYLINDER HEAD(B)	2	

FIG E017-1 A2300N2-ATC(20C-47HP)	GENERATOR & ELECTRIC DEVICE	Year/Month 2020/02

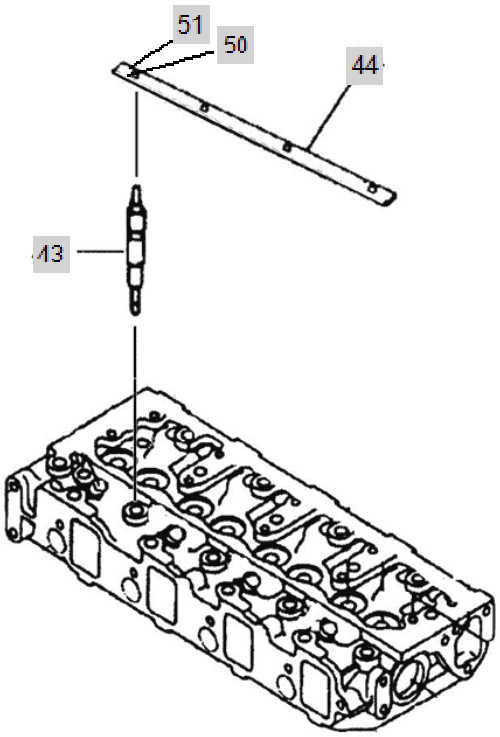

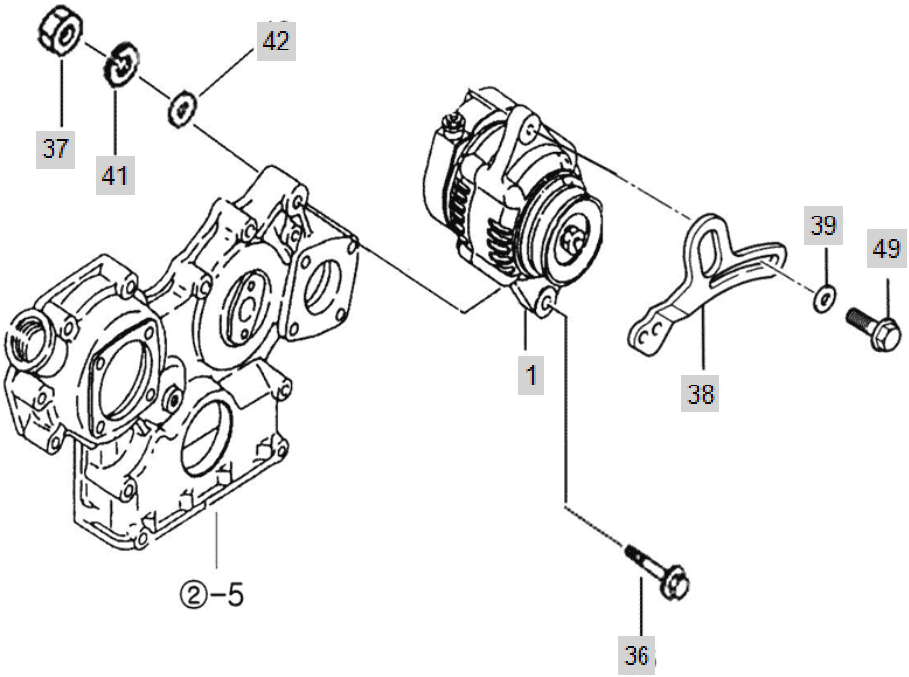

FIG E017-1 A2300N2-ATC(20C-47HP)	GENERATOR & ELECTRIC DEVICE	Year/Month 2020/02

KeyNo.	Part Number	Part Name	Quantity	Other
1	HN4101000DA2	ALTERNATOR (12V-50A)	1	
36	HRA1803500A4	BOLT,ALTERNATOR	1	
37	26716-080002	NUT,HEX (D8)	1	
38	HN41020000A3	BRACKET,ALTERNATOR	1	
39	RR15170000A4	WASHER 8.5X20X3.2	1	
41	22217-080000	WASHER, SPRING (Φ 08)	1	
42	22127-080000	WASHER, PLAIN (D80)	1	
43	HK15170000A4	PLUG, PREHEAT	4	
44	HRA1801300A4	CONNECTOR,ELECTRICAL	1	
49	26013-080302	HEX BOLT W/WASHER	1	
50	HA00000920A	HARNESS H	1	
51	HA00000861C	HARNESS A	1	

FIG E017-2 A2300N2-ATC(20C-47HP)	GENERATOR & ELECTRIC DEVICE	Year/Month 2020/02

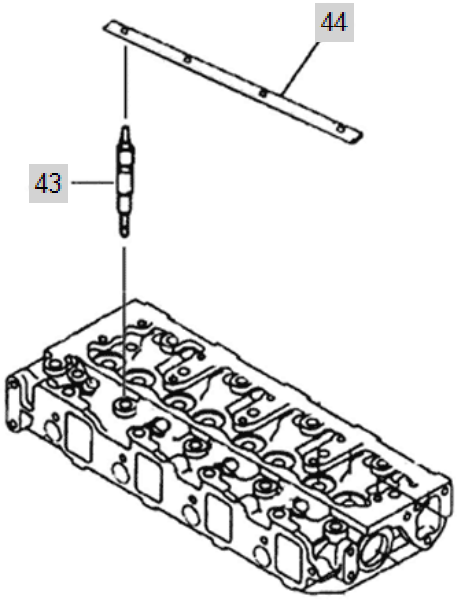

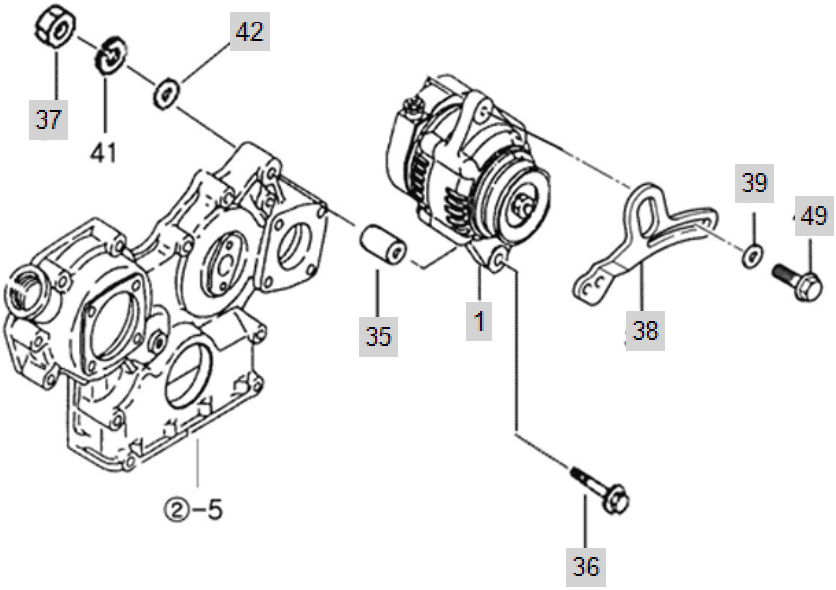

FIG E017-2 A2300N2-ATC(20C-47HP)	GENERATOR & ELECTRIC DEVICE	Year/Month 2020/02

KeyNo.	Part Number	Part Name	Quantity	Other
1	EA00004190B	ALTERNATOR ASS'Y(12V-70A)	1	
35	HN21240000A4	SPACER,ALTERNATOR	0	
36	26106-081052	SCREW,HEXFLANGEHEADCAP	1	
37	26716-080002	NUT,HEX (D8)	1	
38	EA00004306A	BRACKET, ALTERNATOR	1	
39	RR15170000A4	WASHER 8.5X20X3.2	1	
42	22127-080000	WASHER, PLAIN (D80)	2	
43	HK15170000A4	PLUG, PREHEAT	4	
44	HRA1801300A4	CONNECTOR,ELECTRICAL	1	
49	26013-080302	HEX BOLT W/WASHER	1	