KUKJE 4520R(2014~) Branson Tractor

Parts Catalogue

BRANSON TRACTOR

CONTENTS

GROUP NO	GROUP NAME	PAGE
000	4020R(US)_E [2014.01~]	6
00133_01	CYLINDER BLOCK)	8
00133_02	GEAR CASE	10
00133_03	FLYWHEEL HOUSING & OIL PAN	12
00133_04	CYLINDER HEAD & HEAD COVER	14
00133_05	INTAKE MANIFOLD	17
00133_07	EXHAUST MANIFOLD	19
00133_08	CAM SHAFT & DRIVING GEAR	21
00133_09	CRANK SHAFT & PISTON	23
00133_10	BALANCER	25
00133_11	LUB. OIL SYSTEM	27
00133_12	COOLING SYSTEM	29
00133_13	FUEL INJECTION PUMP	31
00133_14	FUEL INJECTION SYSTEM	33
00133_15	FUEL SYSTEM	35
00133_15-2	FUEL SYSTEM(2017.01)	37
00133_15-3	FUEL SYSTEM(2017.12)	39
00133_16-1	STARTING MOTOR	41
00133_16-2	STARTING MOTOR(2016.11)	43
00133_18	DPF & DPF APPLICATION SYSTEM_1	45
00133_19	DPF & DPF APPLICATION SYSTEM_2	47
00133_20	DATAPLATE	49
136TIER3-1	BONNET SUPPORT-TIER3(2019.03~)	51
C001	LEVER ACCELERATOR	53
C002-1	Steering_Column	55
C002-2	STEERING COLUMN	57
C003-1	Shuttle_Assy	59
C003-2	SHUTTLE ASS'Y	61
C004D	Front_Axle_Bracket	63
C004D-2	FRONT AXLE BRACKET	65
C009-1	Center_Pin_Support	67
C009-2	CENTER PIN SUPPORTER(2018.03~)	69
C010D	Tie_Rod	71
C012-1	Ring_Gear_Differential_Gear	73
C012-2	RING GEAR, DIFFERENTIAL GEAR	75

GROUP NO	GROUP NAME	PAGE
C019-1	Gear_Case_Front_Axle	77
C019-2	GEAR CASE, FRONT AXLE(2014.12)	79
C019-3	GEAR CASE, FRONT AXLE(2015.12)	81
C019-4	GEAR CASE, FRONT AXLE	83
C020A-1	FRONT AXLE SPACER	85
C020B-1	Spacer	87
C020B-1	Spacer	89
C020T-2	Spacer	91
C023-1	Cover_Shaft	93
C023-2	Cover_Shaft	95
C032	P.S.T_Cylinder	97
C034	P.S.T._Pipe	99
C036D-1	Clutch Housing	101
C036D-2	CLUTCH HOUSING	103
C038-1	ClutchAss'y	105
C038-2	ClutchAss'y	107
C040-1	ClutchRelease	109
C040-2	ClutchRelease	111
C041-1	TransmissionCaseShift	113
C041-2	TransmissionCaseShift	116
C042-1	MAIN REVERSER GEAR	119
C042-2	MAIN REVERSER GEAR	122
C043	FrontDrive&RangeShiftGear	125
C044	전륜,부변속,초저속레버(2019.06~)	127
C045-1	GearINDPTOSpeedChange	129
C045-2	GEAR, IND PTO SPEED CHANGE(2014.12)	132
C045-3	GEAR, IND PTO SPEED CHANGE(2018~)	135
C046-1	RearAxleCasePTOShift	138
C046-2	REAR AXLE CASE, PTO SHIFT	140
C047	LeverAss'yPTOSpeedChange	142
C048-1	HousingRearAxle	144
C048-2	HOUSING, REAR AXLE	146
C049-1	DrivingPartRearAxle	148
C049-2	DrivingPartRearAxle(2016.06)	151
C050B-1	Brake	153

GROUP NO	GROUP NAME	PAGE
C050T-2	Brake	155
C053-1	BrakeClutchPedal	157
C053-2	BrakeClutchPedal	160
C054	SupportBrake	163
C055	ParkingBrake	165
C067	LeverMainShift	167
C099B-1	HYD_Pump	169
C099B-2	HYD_Pump	171
C101-1	CaseHYDCylinder	173
C101-2	CASE, HYD CYLINDER(2014.12)	175
C101-3	CASE, HYD CYLINDER	177
C101-4	CASE, HYD CYLINDER(2019.08~)	179
C102-1	IND PTO VALVE SUPPORT	181
C102-2	IND PTO VALVE SUPPORT	183
C104-1	PistonAssembly	185
C104-2	PistonAssembly	187
C108	SaftyValve	189
C109	StopValve	191
C111-1	HYD ControlPositionType	193
C111-2	HYD CONTROL POSITION TYPE	195
C113-1	DraftControl	197
C113-2	DRAFT CONTROL(2014.12)	199
C115D-1	HYDPIping	201
C115D-2	HYD PIPING_USTODTKS(2014.12)	203
C115D-3	HYD PIPING	205
C118	HYD Filter	207
C119-1	Electric_Wiring(~2015)	209
C119-2	ELE'C WIRING	211
C124	Battery	213
C125-1	Switch	215
C125-2	SWITCH(2016.03)	217
C125-3	SWITCH(2018.05)	219
C131	Horn	221
C132	Lamp	223
C134	Meter_Assembly	225

GROUP NO	GROUP NAME	PAGE
C135-1	Bonnet	227
C135-2	BONNET	229
C136A-3	본네트 지지대-Tier4(201903~)	231
C137	Dash_Board	233
C138-1	Fender	235
C138-2	Fender	237
C139	Foot_Rest_Assembly	239
C140-1	Seat	241
C140-2	Seat	243
C141-1	FuelTank	245
C141D-2	FUEL TANK	247
C144	Name_Plate_20R	249
C144C	Nameplate	252
C146-1	Top_Link_Lift_Link	254
C146-2	Top_Link_Lift_Link(2014.08.28)	256
C146-3	TOP LINK, LIFT LINK(2014.12)	258
C146-4	Top Link Lift Link(2018.12~)	260
C150A-1	Lower_Link	262
C150D-1	LOWER LINK	264
C150D-2	LOWER LINK	266
C152	DrawBar_Hitch	268
C158	Safety_Frame_Assy	270
C159	Mid_ROPS_Assy	272
C160	Front_Weight	274
C161D-1	Engine_Sub_4cylinder	276
C161D-2	엔진 조립 관계	278
C161E-2	엔진 조립 관계	280
C191-1	4Port_Assembly	282

FIG 000 4520R(2014~)	4020R(US)_E [2014.01~]	Year/Month 2020/02

20R_E Parts List CHASSIS

3120R ENGINE
3520R ENGINE
4020R ENGINE
4520R ENGINE
5220R ENGINE

FIG 000 4520R(2014~)	4020R(US)_E [2014.01~]	Year/Month 2020/02

KeyNo.	Part Number	Part Name	Quantity	Other
20R_E Parts list	20R_E_1	20R_E [2014~]	0	
3120R ENGINE	20R_E_A	3120R ENGINE	0	
3520R ENGINE	20R_E_B	3520R ENGINE	0	
4020R ENGINE	20R_E_C	4020R ENGINE	0	
4520R ENGINE	20R_E_D	4520R ENGINE	0	
5220R ENGINE	20R_E_E	5220R ENGINE	0	

FIG 00133_01 4520R(2014~)	CYLINDER BLOCK)	Year/Month 2020/02

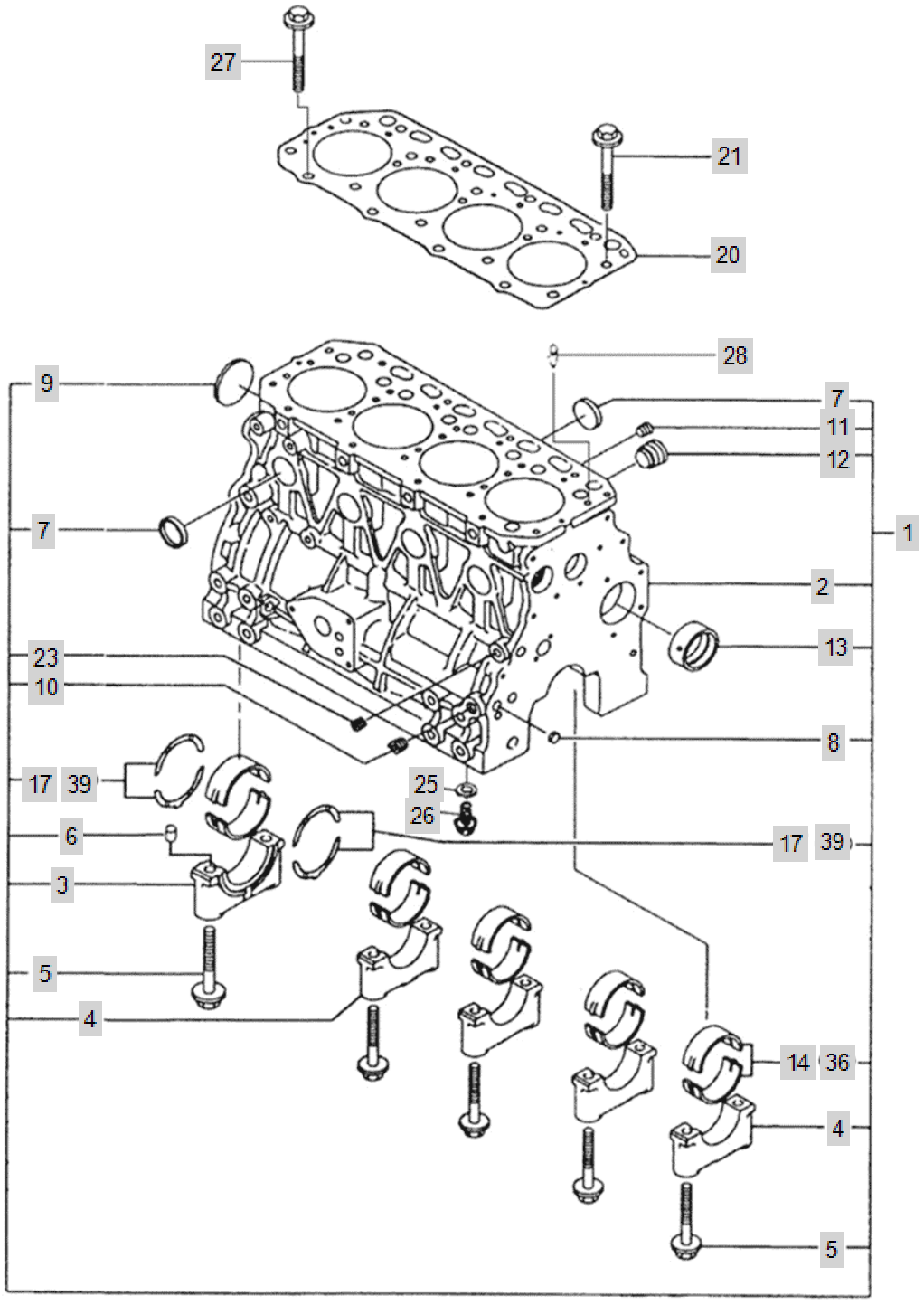

FIG 00133_01 4520R(2014~)	CYLINDER BLOCK)	Year/Month 2020/02

KeyNo.	Part Number	Part Name	Quantity	Other
1	HRA0100111B9	BLOCK ASS'Y, CYLINDER	1	
2	HRA0103101A0	BLOCK, CYLINDER	1	
3	HRA0100102B3	CAP,MAIN BEARING	1	
4	HRA0100103B3	CAP,MAIN BEARING	4	
5	HRA0100104A4	SCREW,HEXFLANGEHEADCAP	10	
6	22351-030010	PIN, SPRING (3-01)	1	
7	27241-300000	PLUG (D30)	8	
8	HRA0100108A4	PLUG,EXPANSION	3	
9	27231-500000	PLUG,EXPANSION	1	
10	23871-020000	Plug, Pipe	1	
11	23871-030000	PLUG, PIPE	1	
12	HM23030000A4	PLUG	1	
13	HRU0100105A3	BUSH, CAM SHAFT	1	
14	HRA0100200A9	BEARING,MAIN- >HRA0100201A3 HRA0100202A3	5	
17	HRA0100300A9	BEARING,CRANKSHAFT THRUST	2	
20	HRU0100400A2	GASKET,CYLINDER HEAD (A2300)	1	
21	HRA0100500A4	SCREW,HEXFLANGEHEADCAP	14	
23	23871-010000	PLUG	1	
25	23414-080000	WASHER, PLAIN (Φ8)	4	
26	26116-080122	SCREW,HEXAGONHEADCAP	4	
27	HRA0100700A4	SCREW,HEXFLANGEHEADCAP	4	
28	HRA0100800A4	PIN,OIL	1	
36	HRA0100200A9	BEARING,MAIN- >HRA0100201A3 HRA0100202A3	5	
39	HRA0100300A9	BEARING,CRANKSHAFT THRUST	2	

FIG 00133_02 4520R(2014~)	GEAR CASE	Year/Month 2020/02

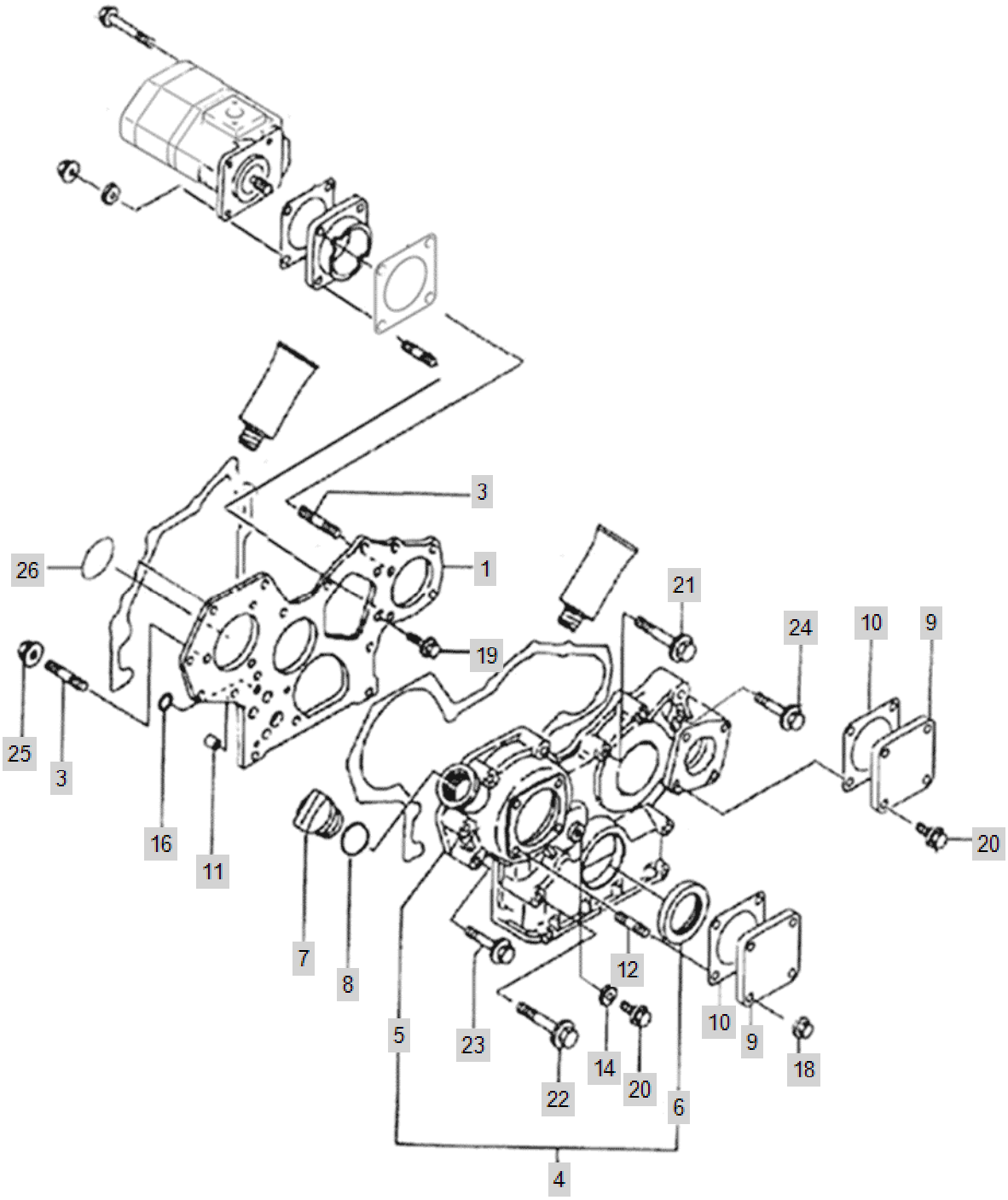

FIG 00133_02 4520R(2014~)	GEAR CASE	Year/Month 2020/02

KeyNo.	Part Number	Part Name	Quantity	Other
1	HRA020010DC2	PLATE, GEAR COVER	1	
3	HM02380000A4	STUD	4	
4	EA00000527C	COVER,FRONT	1	
5	EA00000413C	COVER,FRONT	1	
6	HRC0200402B4	OIL SEAL (G)	1	
7	HC03470000B4	CAP,FILTER	1	
8	24311-000320	O-RING, DYNAMIC (Φ32)	1	
9	HC01230000C4	COVER,ACCESSORYDRIVE	2	
10	HA02110000B4	GASKET,ACCDRIVECOVER	2	
11	HRA0201100A4	PIN,GUIDE	2	
12	26216-080162	STUD	4	
14	23414-080000	WASHER, PLAIN (Φ8)	1	
16	24311-000160	O-RING, DYNAMIC (Φ16)	2	
18	26367-080002	HEX FLANGE NUT (Φ8)	4	
19	26116-080162	SCREW,HEXAGONHEADCAP	3	
20	26106-080222	SCREW, HEX FLANGE HEAD CAP	5	
21	26106-080602	SCREW,HEXFLANGEHEADCAP	3	
22	26106-080902	SCREW,HEXFLANGEHEADCAP	2	
23	26106-080852	SCREW,HEXFLANGEHEADCAP	7	
24	26106-080502	SCREW,HEXFLANGEHEADCAP	1	
25	26367-080002	HEX FLANGE NUT (Φ8)	3	
26	24341-000500	O-RING, FIX (Φ50)	1	

FIG 00133_03 4520R(2014~)	FLYWHEEL HOUSING & OIL PAN	Year/Month 2020/02

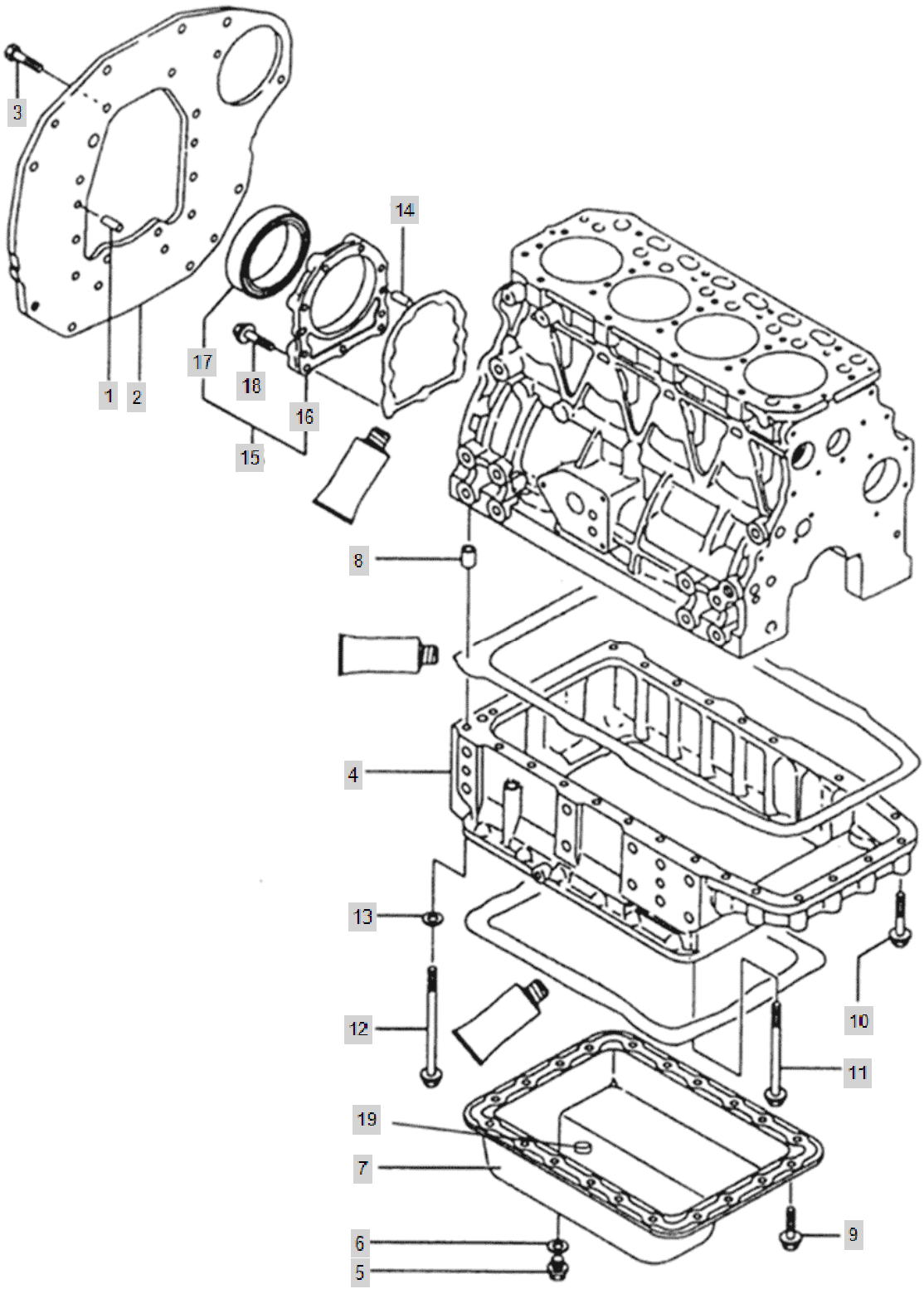

FIG 00133_03 4520R(2014~)	FLYWHEEL HOUSING & OIL PAN	Year/Month 2020/02

KeyNo.	Part Number	Part Name	Quantity	Other
1	22312-080160	PIN, DOWEL (8-16)	2	
2	HRA0300200B1	MOUNTING FLANGE	1	
3	26116-100202	HEX FLANGE BOLT(M10X1.5X20)	8	
4	HRA0300400C0	ADAPTER,OIL PAN	1	
5	23490-140002	Plug, Drain	1	
6	24311-000160	O-RING, DYNAMIC (Φ16)	1	
7	HRA0300700A1	COVER, LOWER	1	
8	HRA0300800A4	PIN,GUIDE	1	
9	26106-080122	Bolt, Hexa (8-12)	8	
10	26106-080502	SCREW,HEXFLANGEHEADCAP	8	
11	26106-081202	SCREW,HEXFLANGEHEADCAP	16	
12	26116-081202	SCREW,HEXAGONHEADCAP	2	
13	22217-080000	WASHER, SPRING (Φ 08)	2	
14	22312-080160	PIN, DOWEL (8-16)	2	
15	HRC0300800A9	OIL SEAL HOUSE Ass'y	1	
16	HRA0301401B2	OILSEAL CASE	1	
17	HRC0300802A4	OIL SEAL (F)	1	
18	26106-080302	HEX BOLT, FLANGE	9	
19	HF01470000A4	MAGNET	1	

FIG 00133_04 4520R(2014~)	CYLINDER HEAD & HEAD COVER	Year/Month 2020/02

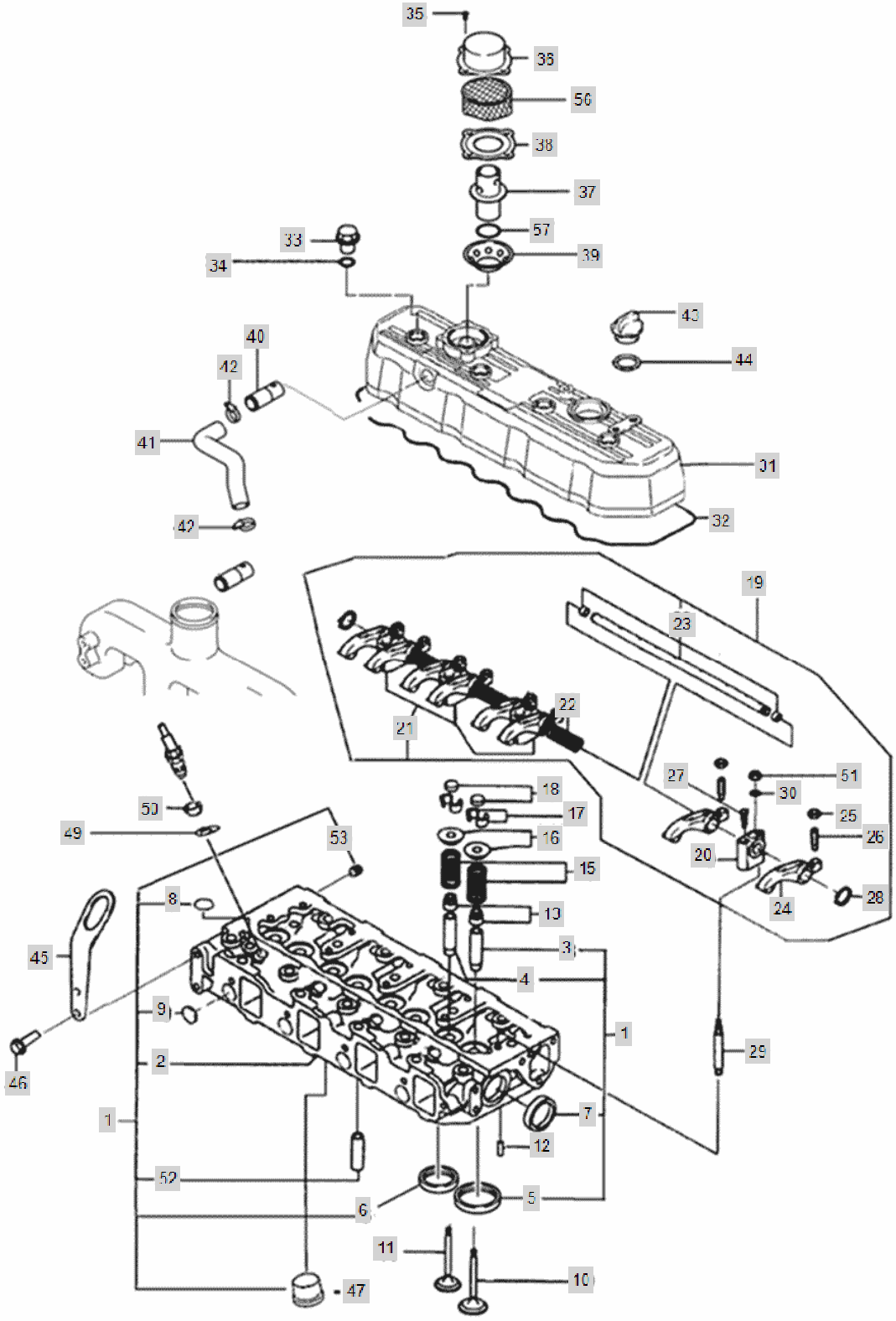

FIG 00133_04 4520R(2014~)	CYLINDER HEAD & HEAD COVER	Year/Month 2020/02

KeyNo.	Part Number	Part Name	Quantity	Other
1	EA00003239A	CYLINDER HAED ASSY	1	
2	EA00003238A	DATA PLATE	1	
4	HRA0400103B4	GUIDE,VALVESTEM	8	
5	HRA0400104B4	SEAT,ENGINEINTAKEVALVE	4	
6	HRA0400105B4	SEAT,ENGINE EXHAUST VALVE	4	
7	27241-400000	PLUG (D40)	2	
8	27241-220000	PLUG,EXPANSION	4	
9	27241-220000	PLUG,EXPANSION	4	
10	HRA0400200A4	VALVE,INTAKE	4	
11	HRA0400300A4	VALVE,EXHAUST	4	
12	22312-040100	PIN, DOWEL (4-10)	2	
13	HA03070000A4	SEAL,VALVESTEM	8	
15	HRA0400700A4	SPRING,VALVE	8	
16	HRA0400800A4	RETAINER,VALVESPRING	8	
17	HRA0400900A4	COTTER,VALVE	16	
18	HK03680000B4	CAP,VALVE	8	
19	HRA0401100B2	LEVER,ROCKER	1	
20	HRA0401200A4	SUPPORT,ROCKERLEVER	1	
21	HRA0401300A4	SUPPORT,ROCKERLEVER	3	
22	HRA0401400A4	SPRING,COMPRESSION	3	
23	HRA0401500A2	SHAFT,ROCKERLEVER	1	
24	HRA0401600A4	LEVER,ROCKER	8	
25	AF02110000E4	SCREW,RKRLEVERADJUSTING	8	
26	HH05280000A4	NUT,VALVEADJUSTING	8	
27	26921-080102	SCREW,SLOTTEDSET	1	
28	22242-000190	SNAP RING, SHAFT (Φ 19)	2	
29	HRA0401800A4	STUD	4	
30	22117-120000	WASHER, PLAIN (Φ 12)	4	
31	HRA0402300C0	COVER, VALVE	1	
32	HRA0402400B3	GASKET,VALVECOVER	1	
33	HA03520000B4	NUT,HEXAGONCAP	4	
34	24311-000140	O-RING, DYNAMIC (Φ14)	4	
35	26587-040102	SCREW,FILLISTERHEADCAP	4	
36	HRA0403600A4	COVER,BREATHER	1	
37	HRA0403700A4	Valve, Pressure Relief	1	
38	HRA0403800A4	GASKET,BREATHER	1	
39	HRA0403900A4	PLATE,BREATHERADJUSTING	1	
40	HRA0404000A4	TUBE,BREATHER	1	
41	HRA0404100C3	HOSE, BREATHER	1	
42	23080-021000	CLAMP,VBAND	2	
43	HC03470000B4	CAP,FILTER	1	
44	24311-000320	O-RING, DYNAMIC (Φ32)	1	
45	HK03530000A4	BRACKET,LIFTING	1	
46	26106-080162	SCREW,HEXFLANGEHEADCAP	2	
47	EA00003012A	PRE-CHAMBER	4	

FIG 00133_04 4520R(2014~)	CYLINDER HEAD & HEAD COVER	Year/Month 2020/02

KeyNo.	Part Number	Part Name	Quantity	Other
49	HRA0404900A4	SEAL,INJECTOR	4	
50	HRA0405000A4	SPACER, FUEL INJECTOR	4	
51	HA03180000B4	NUT,REGULARHEXAGON	4	
53	23871-010000	PLUG	1	
56	HC03720000B4	BAFFLE	2	
57	24341-000160	O-RING, FIX (Φ16)	1	

FIG 00133_05 4520R(2014~)	INTAKE MANIFOLD	Year/Month 2020/02

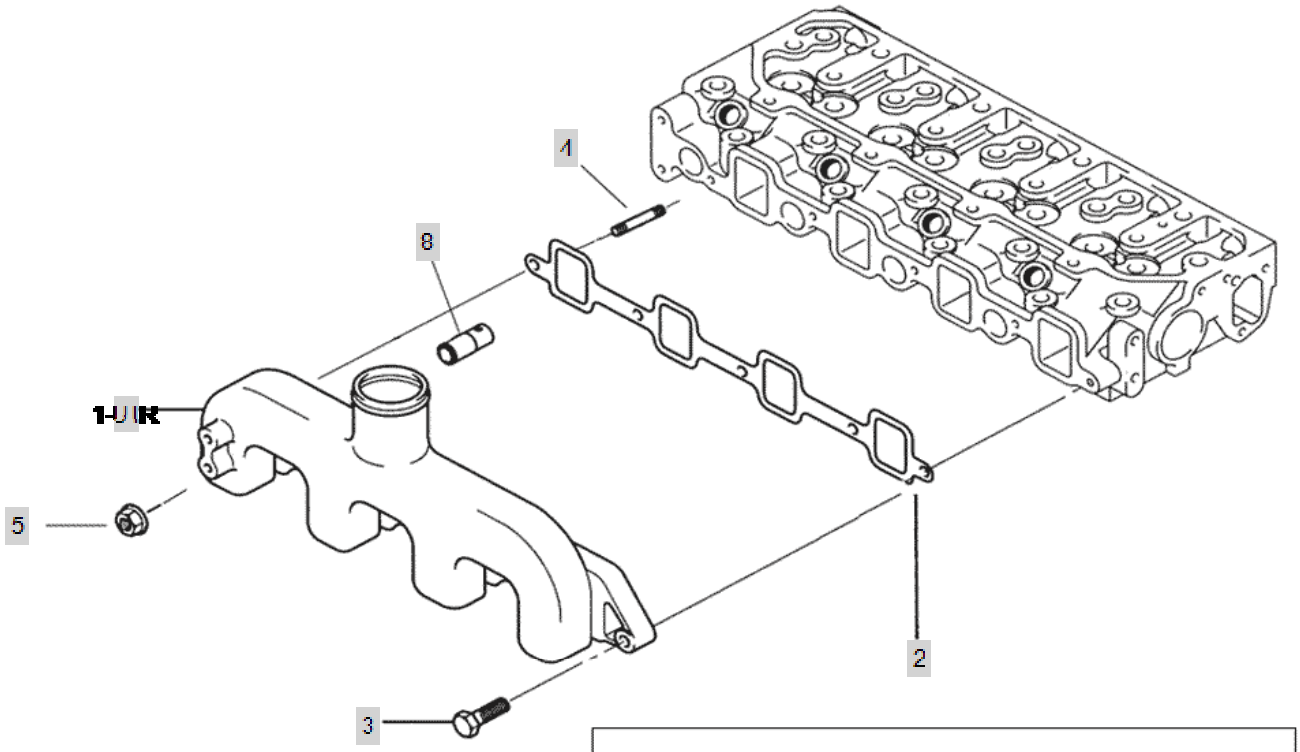

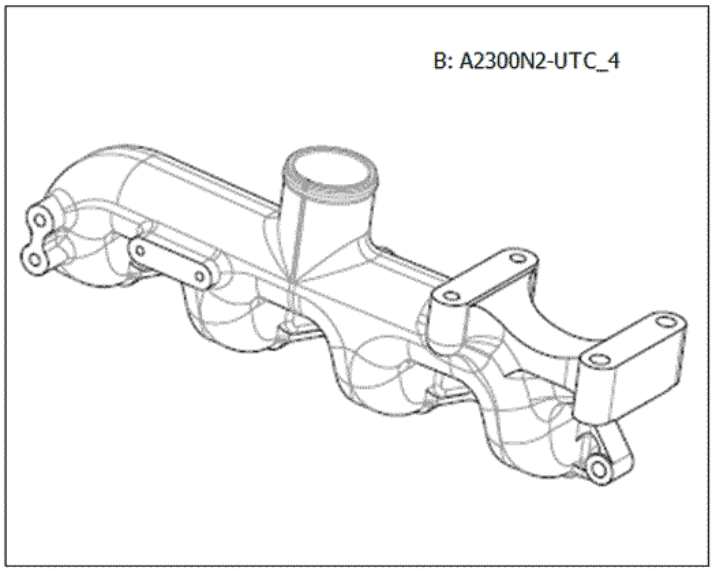

FIG 00133_05 4520R(2014~)	INTAKE MANIFOLD	Year/Month 2020/02

KeyNo.	Part Number	Part Name	Quantity	Other
1-UTR	HRA0500100C1	MANIFOLD,AIRINTAKE	1	
2	HRA0500200A3	GASKET,INTAKE MANIFOLD	1	
3	26106-080302	HEX BOLT, FLANGE	4	
4	26216-080352	BOLT, STUD 8 X 35	1	
5	26367-080002	HEX FLANGE NUT (Φ8)	1	
8	HRA0404000A4	TUBE,BREATHER	1	

FIG 00133_07 4520R(2014~)	EXHAUST MANIFOLD	Year/Month 2020/02

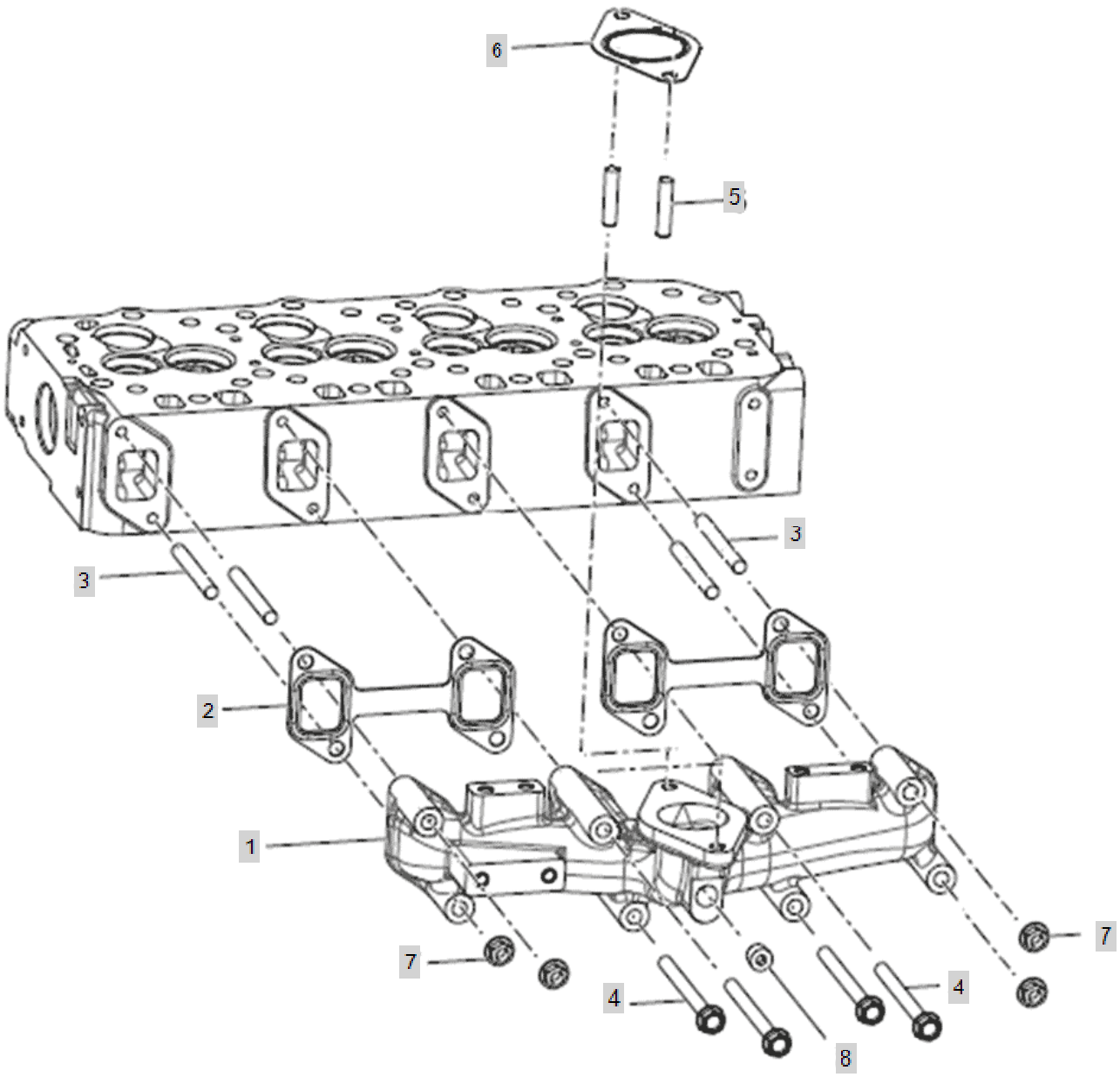

FIG 00133_07 4520R(2014~)	EXHAUST MANIFOLD	Year/Month 2020/02

KeyNo.	Part Number	Part Name	Quantity	Other
1	EA00003142A	EX_MANIFOLD	1	
2	HRA0600200A3	GASKET,EXHAUSTMANIFOLD	2	
3	26216-080652	BOLT	4	
4	26106-080952	FLANGEBOLT	4	
5	26216-080252	STUDBOLT	2	
6	HRA0600700A4	GASKET,MUFFLER	1	
7	26367-080002	HEX FLANGE NUT (Φ8)	4	
8	23871-020000	Plug, Pipe	1	

FIG 00133_08 4520R(2014~)	CAM SHAFT & DRIVING GEAR	Year/Month 2020/02

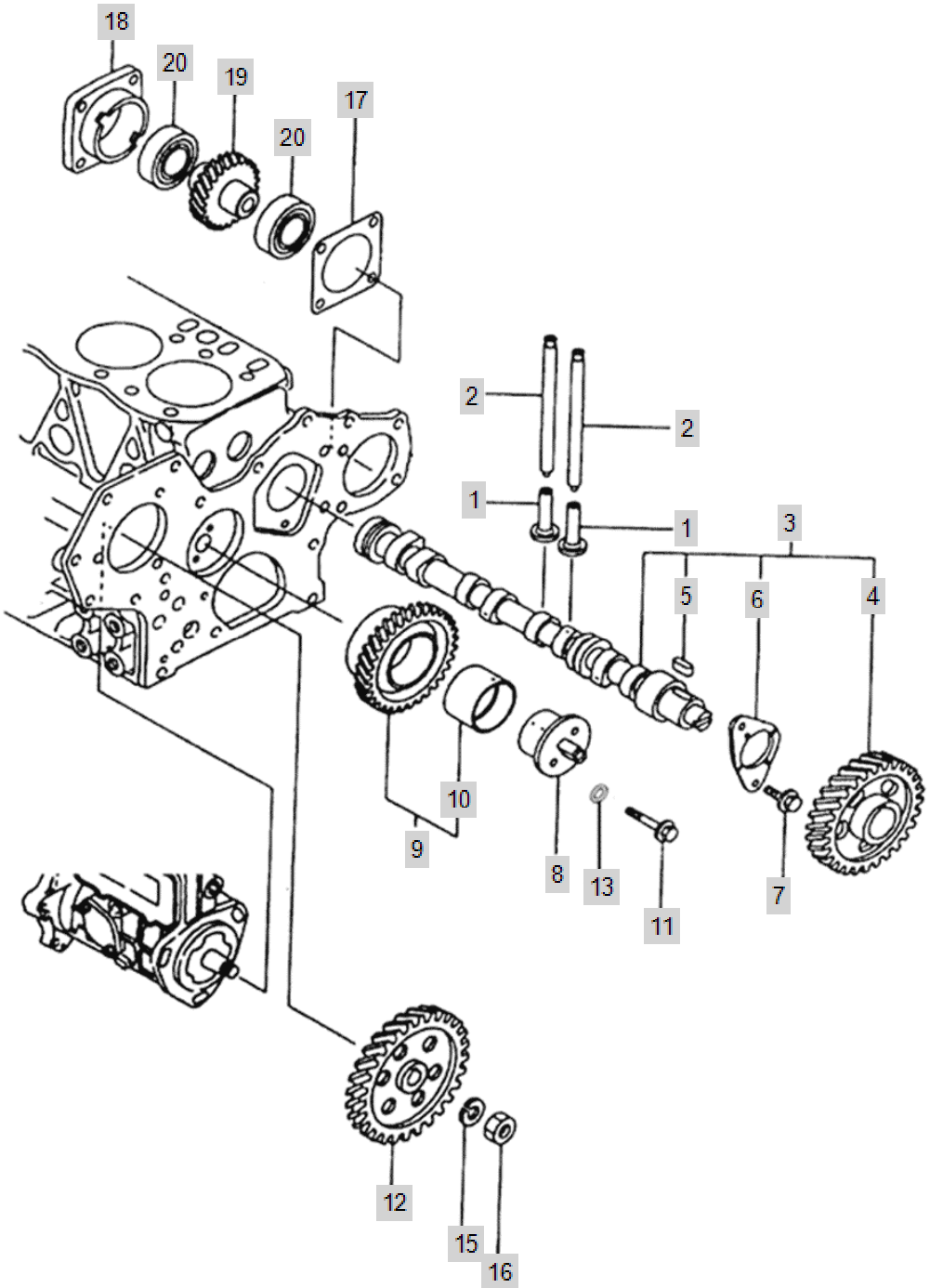

FIG 00133_08 4520R(2014~)	CAM SHAFT & DRIVING GEAR	Year/Month 2020/02

KeyNo.	Part Number	Part Name	Quantity	Other
1	HH08060000B4	TAPPET,VALVE	8	
2	HRA0700200B4	ROD,PUSH	8	
3	HRA0700300B9	CAM SHAFT ASSY	1	
4	HRA0700302A3	GEAR,CAMSHAFT	1	
5	22512-070140	KEY, SLIDING (07-14)	1	
6	HRA0700304A4	Bearing, Camshaft Thrust	1	
7	26106-080162	SCREW,HEXFLANGEHEADCAP	2	
8	EA00000848B	SHAFT, IDLER	1	
9	HRA0700600A3	GEAR,IDLER	1	
10	HH08120000A4	BUSH	1	
11	HRU0700700A4	BOLT,IDLESHAFT	2	
12	HRA070080DB3	GEAR,FUELPUMP	1	
13	22217-080000	WASHER, SPRING (Φ 08)	2	
15	22217-120000	WASHER, SPRING (Φ 12)	1	
16	26716-120002	BOLT,CYLINDER HEAD(B)	1	
17	HK02350000A4	GASKET,ACCDRIVECOVER	1	
18	HK02340000B3	HOUSING, POWER TAKEOFF	1	
19	HRA4000300A3	HYD.PUMP GEAR	1	
20	24101-060064	Bearing, Ball (#6006)	2	

FIG 00133_09 4520R(2014~)	CRANK SHAFT & PISTON	Year/Month 2020/02

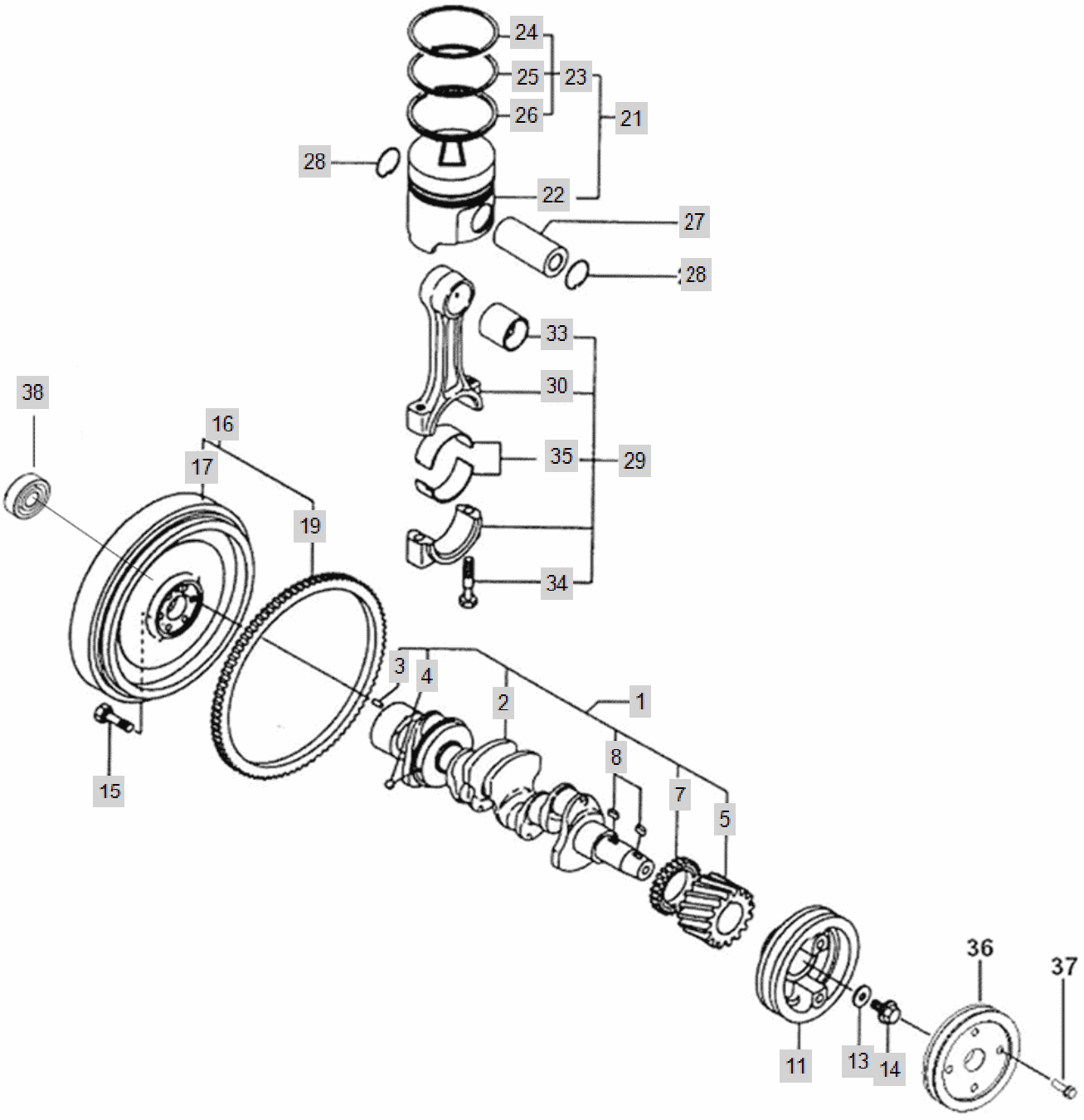

FIG 00133_09 4520R(2014~)	CRANK SHAFT & PISTON	Year/Month 2020/02

KeyNo.	Part Number	Part Name	Quantity	Other
1	HRA080010KD9	CRANKSHAFT	1	
2	HRA0800101D0	CRANKSHAFT	1	
3	22312-080160	PIN, DOWEL (8-16)	1	
4	24190-080002	Ball, Steel	1	
5	HRA0800200A3	GEAR,CRANK SHAFT	1	
7	HRA0800400A3	GEAR,BALANCERDRIVEN	1	
8	22512-070140	KEY, SLIDING (07-14)	2	
11	HRU0020100B2	PULLEY,CRANKSHAFT	1	
13	HRA0800800A4	WASHER,PLAIN	1	
14	HH09090000A4	SCREW,HEXFLANGEHEADCAP	1	
15	HRC0801000A4	SCREW,HEXAGONHEADCAP	6	
16	HRA084000DB9	FLYWHEEL ASS'Y(IND-4CYL)	1	
17	HRA084001DA1	FLYWHEEL(IND-4CYL)	1	
19	HA07070000A2	RING GEAR,FLYWHEEL	1	
21	HRA0801300A9	PISTON ASS'Y	4	
22	HRA0801301B1	PISTON,ENGINE	4	
23	HRA0801302B9	RINGSET,PISTON	4	
24	HRA0801303A4	RING,1STCOMPRESSIONPISTON	4	
25	HRA0801304B4	RING,2NDCOMPRESSIONPISTON	4	
26	HRA0801305B4	RING,OILPISTON	4	
27	HK27150000A4	PIN,PISTON	4	
28	HA08070000A4	RING,RETAINING	8	
29	HRA0801600A9	ROD,ENGINECONNECTING	4	
30	HRA0801601B2	ROD,ENGINE CONNECTING	4	
33	HRA0801603A4	BUSHING	4	
34	HRA0801602A4	SCREW,HEXAGONHEADCAP	8	
35	HRA0801700A3	BEARING,CONNECTINGROD	8	
38	24104-063024	BALL BEARING (#6302UU)	1	

FIG 00133_10 4520R(2014~)	BALANCER	Year/Month 2020/02

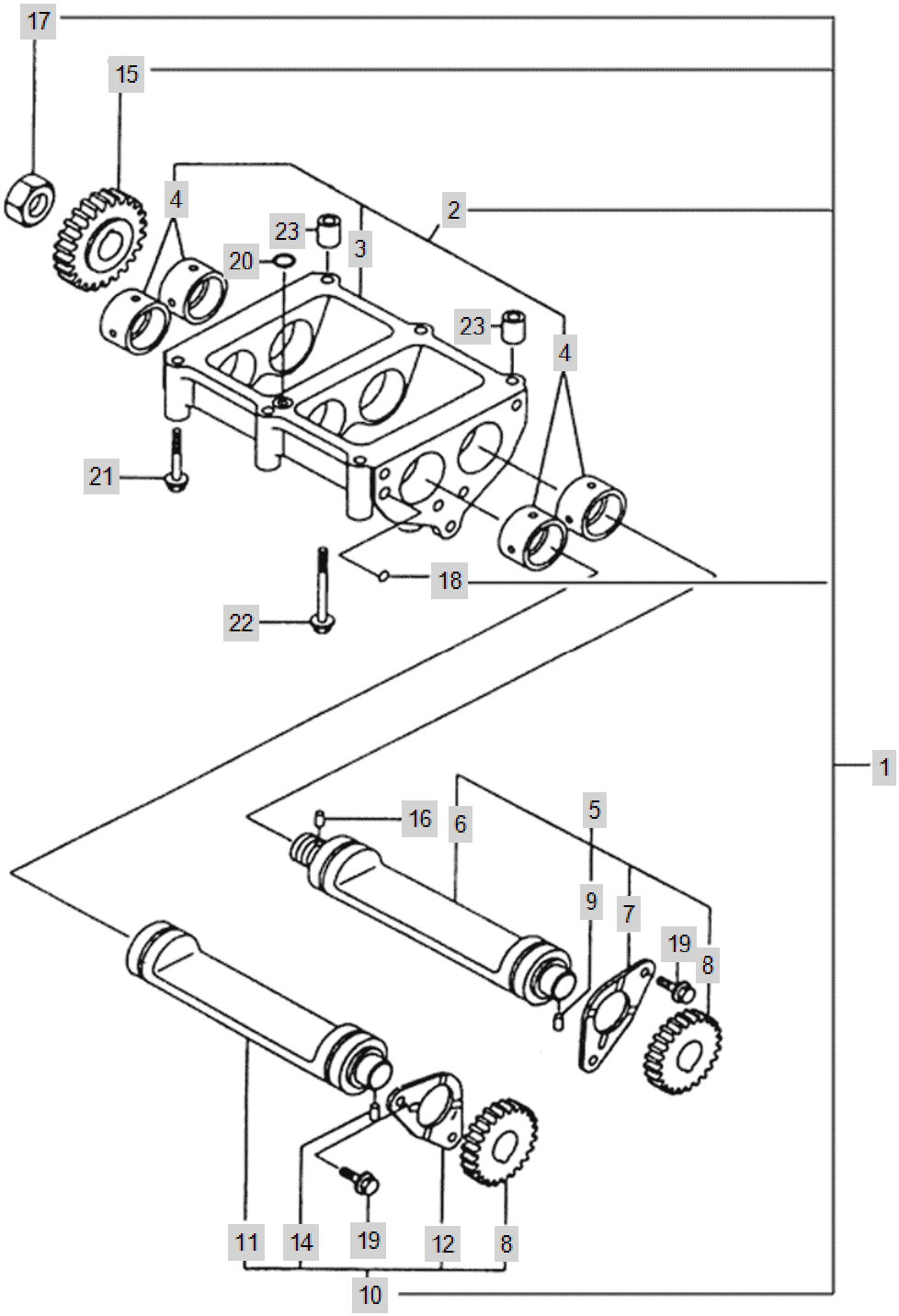

FIG 00133_10 4520R(2014~)	BALANCER	Year/Month 2020/02

KeyNo.	Part Number	Part Name	Quantity	Other
1	HRA1000100A1	BALANCER	1	
2	HRA1000101A9	BALANCER CASE ASS'Y	1	
3	HRA1000109A0	CASE,BALANCER	1	
4	HRA1000102A3	BUSH,BALANCERSHAFT	4	
5	HRA1000200A9	SHAFTASS'Y(A),BALANCER	1	
6	HRA1000201A3	SHAFT(A),BALANCER	1	
7	HRA1000202A4	BEARING,THRUST	1	
8	HRA1000203A3	GEAR(B),BALANCER	2	
9	22312-060080	PIN, DOWEL (6-08)	1	
10	HRA1000300A9	SHAFTASS'Y(B),BALANCER	1	
11	HRA1000301A3	SHAFT(B),BALANCER	1	
12	HRA1000202A4	BEARING,THRUST	1	
14	22312-060080	PIN, DOWEL (6-08)	1	
15	HRA1000204A3	GEAR(A),BALANCER	1	
16	22312-060080	PIN, DOWEL (6-08)	1	
17	HRA1000500A4	NUT,BALANCERGEAR(A)	1	
18	24190-080002	Ball, Steel	2	
19	26106-080162	SCREW,HEXFLANGEHEADCAP	4	
20	24311-000140	O-RING, DYNAMIC (Φ14)	1	
21	26106-080652	SCREW,HEXFLANGEHEADCAP	4	
22	26106-080752	SCREW,HEXFLANGEHEADCAP	2	
23	HRA1000700A4	PIN,GUIDE	2	

FIG 00133_11 4520R(2014~)	LUB. OIL SYSTEM	Year/Month 2020/02

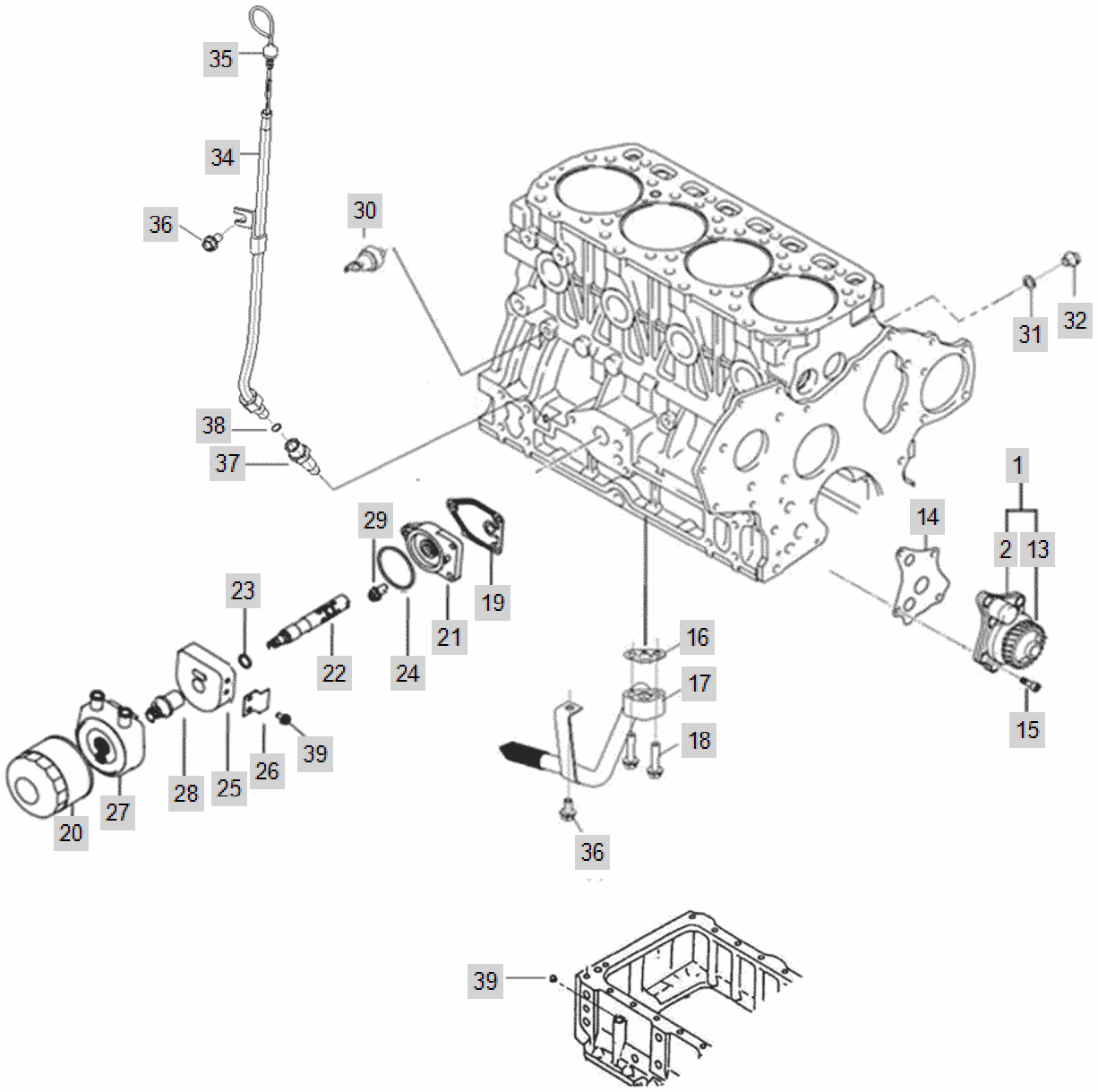

FIG 00133_11 4520R(2014~)	LUB. OIL SYSTEM	Year/Month 2020/02

KeyNo.	Part Number	Part Name	Quantity	Other
1	HRA1100109A9	PUMP, LUBRICATING OIL	1	
2	HRA1100100A2	PUMP,LUBRICATINGOIL	1	
13	HRA1100112A3	GEAR,LUBRICATINGOILPUMP	1	
14	HRA1100600A4	GASKET,LUBOILPUMP	1	
15	26450-060252	SCREW,SOCKETHEADCAP	4	
16	HRD1100700A4	GASKET,OILPAN	1	
17	HRA1100800A2	PIPEASSY,OILINTAKE	1	
18	26106-080352	SCREW,HEXFLANGEHEADCAP	2	
19	HRA1101000A4	GASKET,FILTERHEAD	1	
20	EA00001160B	FILTER, ENGINE OIL	1	
21	HRA1100900B3	HEAD,LUBOILFILTER	1	
22	EA00002852A	PRESSURE CONTORL VALVE	1	
23	24311-000160	O-RING, DYNAMIC (Φ16)	1	
24	24321-000600	SEAL,ORING	1	
25	EA00002818A	SPACER(PRESSURE C.V)	1	
26	EA00002900A	REINFORCEMENT BRACKET(COOLER SPACER)	1	
27	EA00000309A	OIL COOLER ASSY	1	
28	EA00000310A	BOLT COOLER, OIL	1	
29	26106-080202	SQR FLANGE BOLT	3	
30	HA09250000A3	SWITCH,OILPRESSURE	1	
31	23414-100000	PLAIN WASHER (D10)	2	
32	23887-100002	SCREW,HEXAGONHEADCAP	2	
34	EA00002292A	TUBE, OIL GAUGE	1	
35	EA00002293A	OIL GAUGE	1	
36	26106-080162	SCREW,HEXFLANGEHEADCAP	1	
37	HRT0300200A4	GUIDE,DIPSTICK	1	
38	24311-000070	O-RING, DYNAMIC (Φ7)	1	
39	HRT0300500A4	PLUG,EXPANSION	1	

FIG 00133_12 4520R(2014~)	COOLING SYSTEM	Year/Month 2020/02

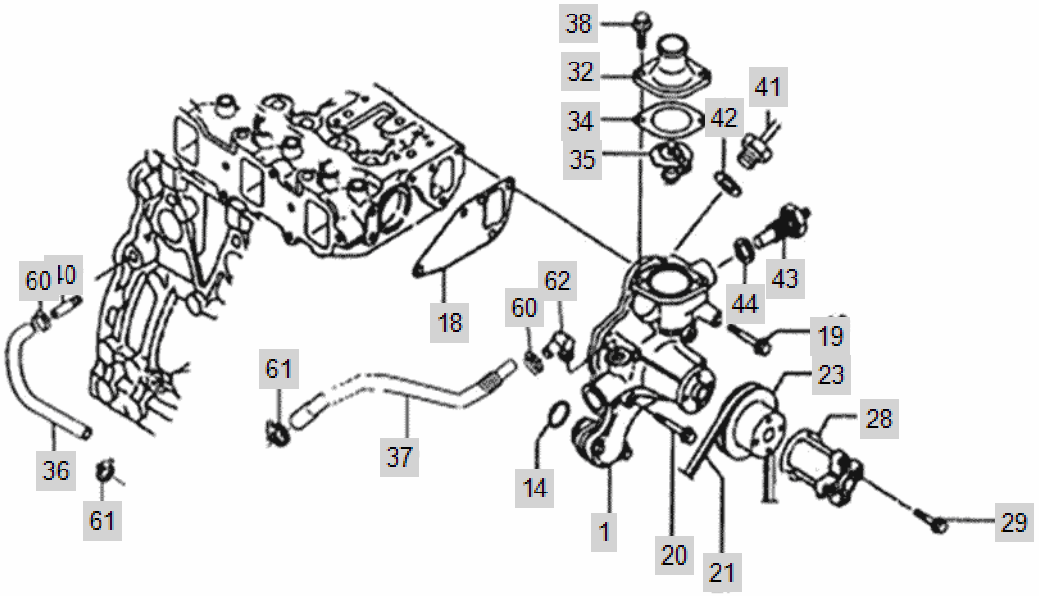

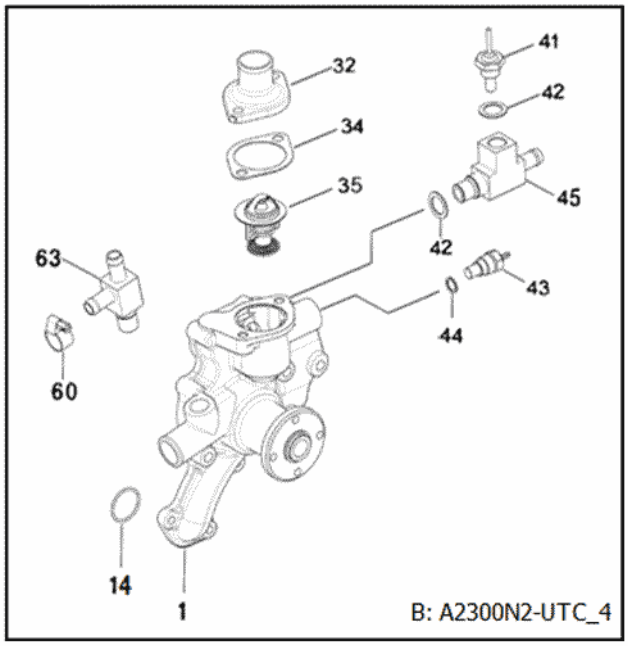

FIG 00133_12 4520R(2014~)	COOLING SYSTEM	Year/Month 2020/02

KeyNo.	Part Number	Part Name	Quantity	Other
1	EA00003252B	WATER PUMP ASS'Y	1	
14	24341-000280	O-RING, FIX (Φ28)	1	
18	HRA1200200A3	GASKET,WATERPUMP	1	
19	26106-080552	HEX FLANGE BOLT (D80)	3	
20	26106-080602	SCREW,HEXFLANGEHEADCAP	1	
21	EA00002554A	V-BELT(A40.5")	1	
23	EA00003004A	V-PULLEY(FAN)	1	
28	EA00000543A	SPACER(FAN)	1	
29	26106-080302	HEX BOLT, FLANGE	4	
32	HC09160000B4	COVER, THERMOSTAT	1	
34	HA10670000A4	GASKET,WATER PUMP -> HA10670000B4	1	
35	HK10030000A3	THERMOSTAT	1	
36	EA00002854A	COOLANT HOSE A, OIL COOLER	1	
37	EA00002855A	COOLANT HOSE B, OIL COOLER	1	
38	26106-080182	SCREW,HEXFLANGEHEADCAP	2	
40	HRC1204000A4	NIPPLE,PLAINPIPE	1	
41	HH12210000A3	SENSOR,GLOWPLUG	1	
42	23414-160000	WASHER,SEALING	1	
43	HH12190000A3	WATER TEMP SENSOR	1	
44	23414-100014	PACKING,COPPER	1	
60	23000-022000	CLAMP,HOSE	2	
61	23000-025000	CLAMP,HOSE	2	
62	CEE2080000A4	ELBOW,PLAINUNION	1	

FIG 00133_13 4520R(2014~)	FUEL INJECTION PUMP	Year/Month 2020/02

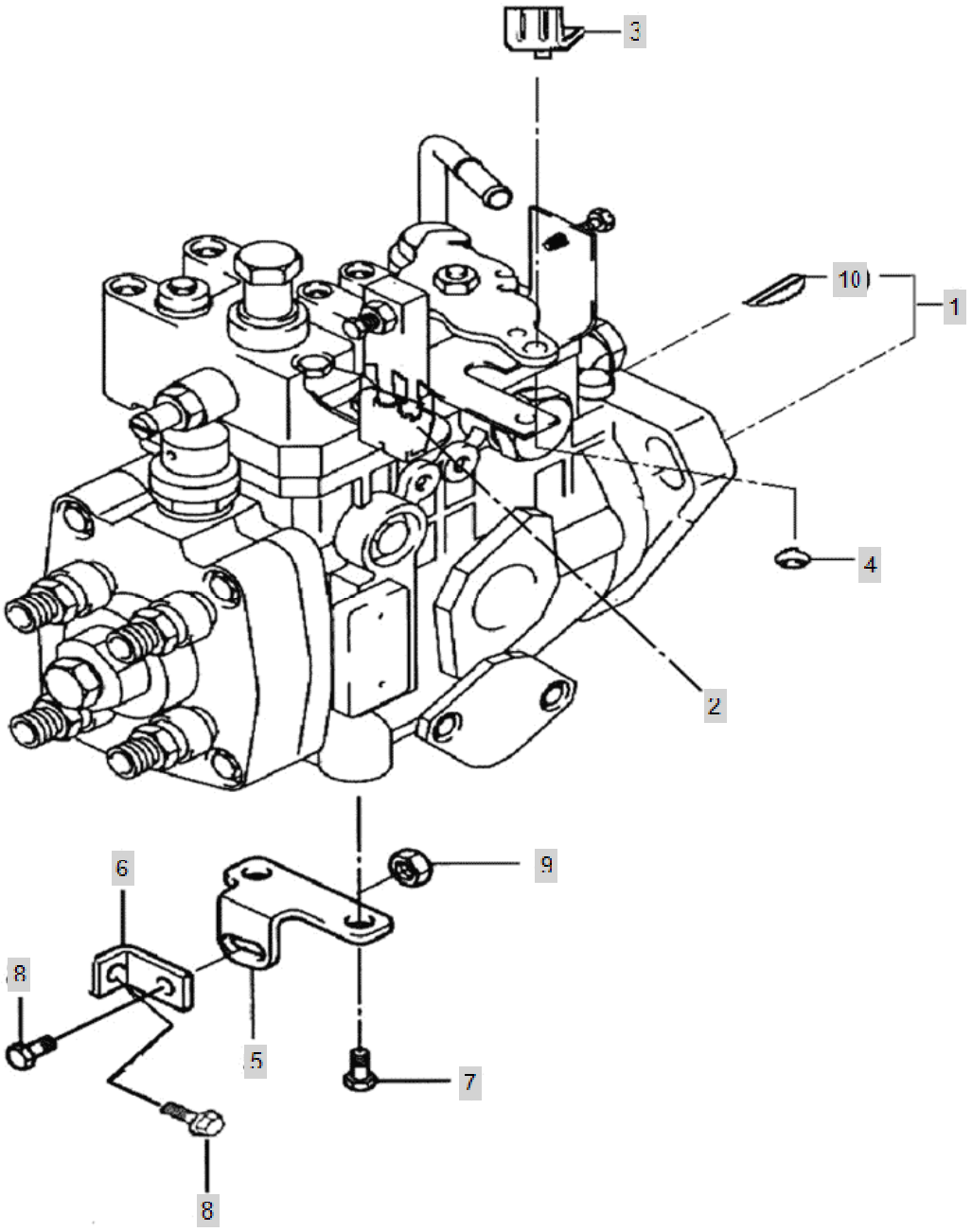

FIG 00133_13 4520R(2014~)	FUEL INJECTION PUMP	Year/Month 2020/02

KeyNo.	Part Number	Part Name	Quantity	Other
1	HRA130010DB1	FUEL INJECTION PUMP (A2300N2)	1	
2	HRA1300600A4	SUPPORT(AXLE LEVER)	1	
3	EA00002101A	LEVER, HOOK, ACCEL	1	
4	22272-000050	RING, CIRCLIP (Φ 05)	1	
5	HRA130020DA4	BRACKET(B),PUMP	1	
6	HRA130030DA4	BRACKET(A),PUMP	1	
7	26116-100162	SCREW,HEXAGONHEADCAP	2	
8	26106-080162	SCREW,HEXFLANGEHEADCAP	2	
9	26367-080002	HEX FLANGE NUT (Φ8)	1	
10	HRA0702100A4	KEY,PLAINWOODRUFF	1	

FIG 00133_14 4520R(2014~)	FUEL INJECTION SYSTEM	Year/Month 2020/02

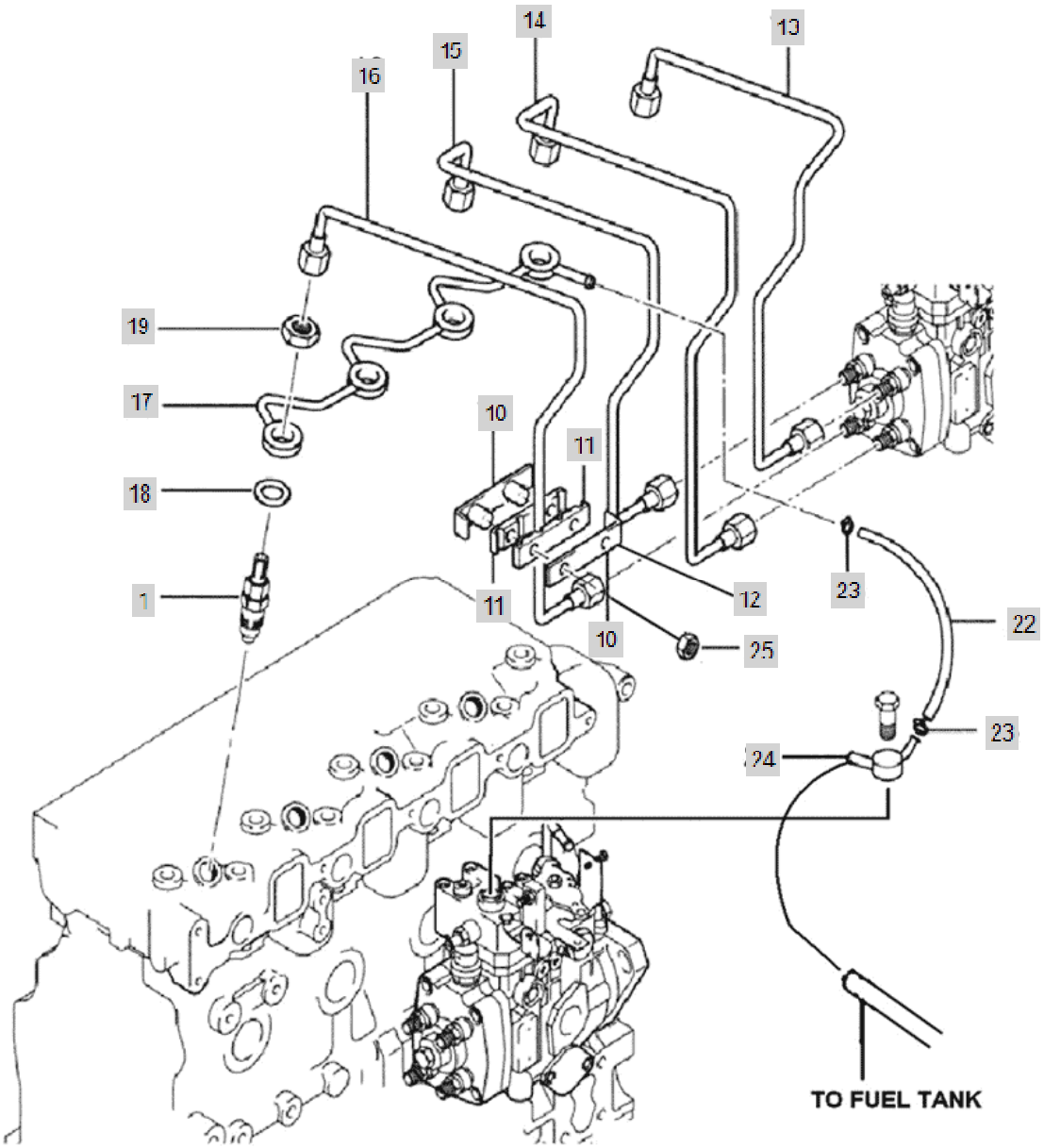

FIG 00133_14 4520R(2014~)	FUEL INJECTION SYSTEM	Year/Month 2020/02

KeyNo.	Part Number	Part Name	Quantity	Other
1	EA00000642A	INJECTOR	4	
10	HRA1502600B4	BRACKET,PIPE	1	
11	HRA1502700A4	RUBBER,BRACKET	2	
12	HRA1502800A4	CLAMP,TUBE	1	
13	HRA150050DB0	PIPE ASSY, FUEL SUPPLY A	1	
14	HRA150060DB0	PIPE ASSY, FUEL SUPPLY (B)	1	
15	HRA150070DB0	PIPE ASSY, FUEL SUUPLY C	1	
16	HRA150080DB0	PIPE ASSY, FUEL SUPPLY D	1	
17	HRA1500900C3	PIPE ASSY, FUEL RETURN	1	
18	HK13440000A4	GASKET,FUELMANIFOLD	4	
19	HK13450000A4	NUT,REGULARHEXAGON	4	
22	EA00000700A	TUBE, FUEL DRAIN	1	
23	23080-010000	CLAMP, V BAND	2	
24	HRA1502400C4	CONNECTOR, BANJO	1	
25	26367-060002	Nut, Hexa (Φ6)	2	

FIG 00133_15 4520R(2014~)	FUEL SYSTEM	Year/Month 2020/02

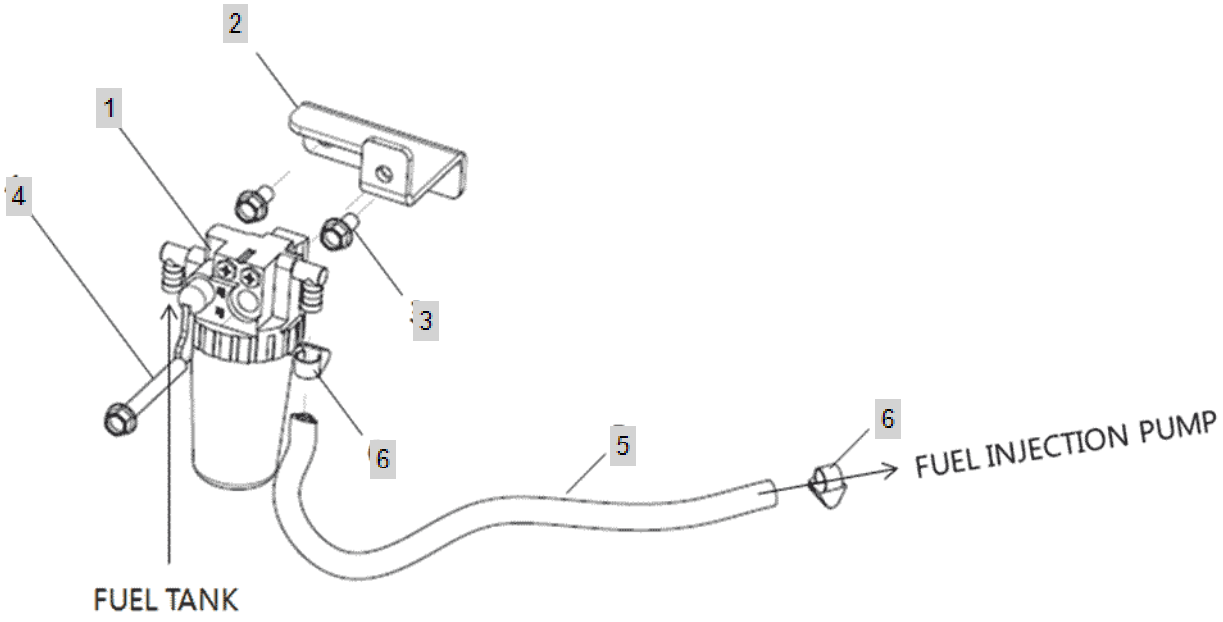

FIG 00133_15 4520R(2014~)	FUEL SYSTEM	Year/Month 2020/02

KeyNo.	Part Number	Part Name	Quantity	Other
1	HK13010000C2	FUEL FILTER ASSY	1	
2	EA00003140B	FILTER BRAKET ASSY	1	
3	26106-080162	SCREW,HEXFLANGEHEADCAP	2	
4	26106-080652	SCREW,HEXFLANGEHEADCAP	1	
5	EA00000173A	HOSE, FUEL ASSY	1	
6	23000-013000	Clip, Hose (Φ13)	2	

FIG 00133_15-2 4520R(2014~)	FUEL SYSTEM(2017.01)	Year/Month 2020/02

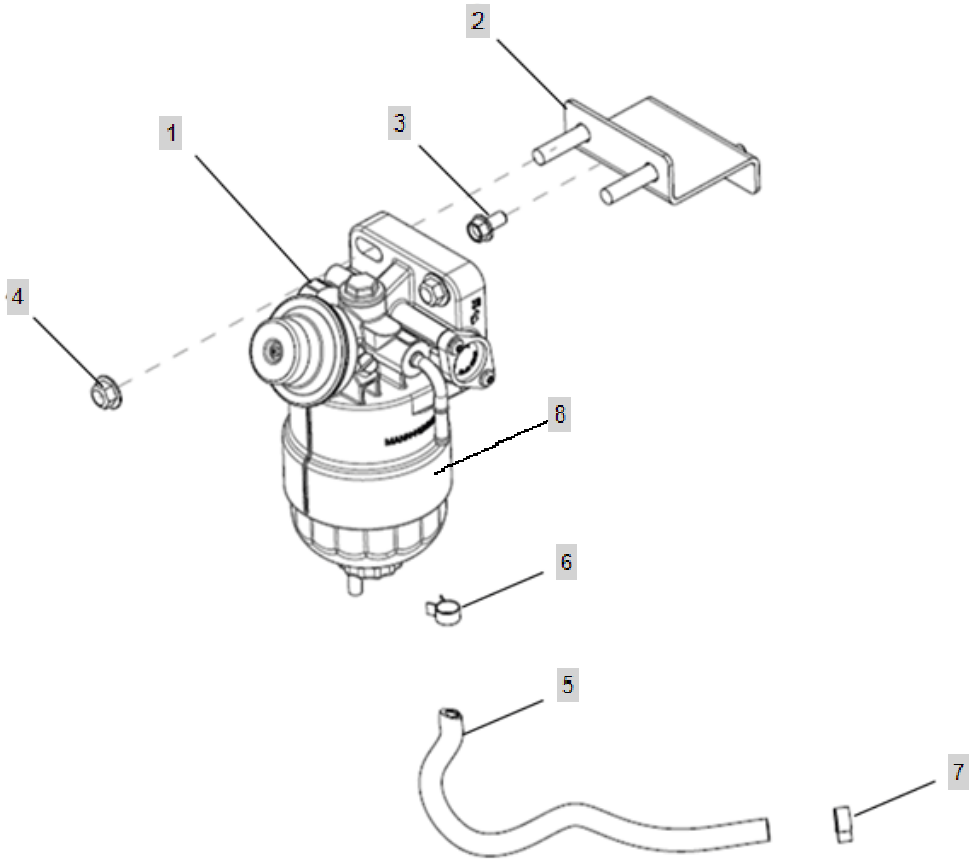

FIG 00133_15-2 4520R(2014~)	FUEL SYSTEM(2017.01)	Year/Month 2020/02

KeyNo.	Part Number	Part Name	Quantity	Other
1	EA00005020A	FUEL FILTER ASS'Y	1	
2	EA00005021A	FULE FILTER BRACTER ASS'Y	1	
3	26106-080162	SCREW,HEXFLANGEHEADCAP	2	
4	26367-100002	NUT,HEXAGONFLANGE	1	
5	EA00000173A	HOSE, FUEL ASSY	1	
6	23000-013000	Clip, Hose (Φ13)	2	
7	23080-013000	Clamp, Hose (Φ13)	1	
8	EA00005252A	FILTER ELEMENT	1	

FIG 00133_15-3 4520R(2014~)	FUEL SYSTEM(2017.12)	Year/Month 2020/02

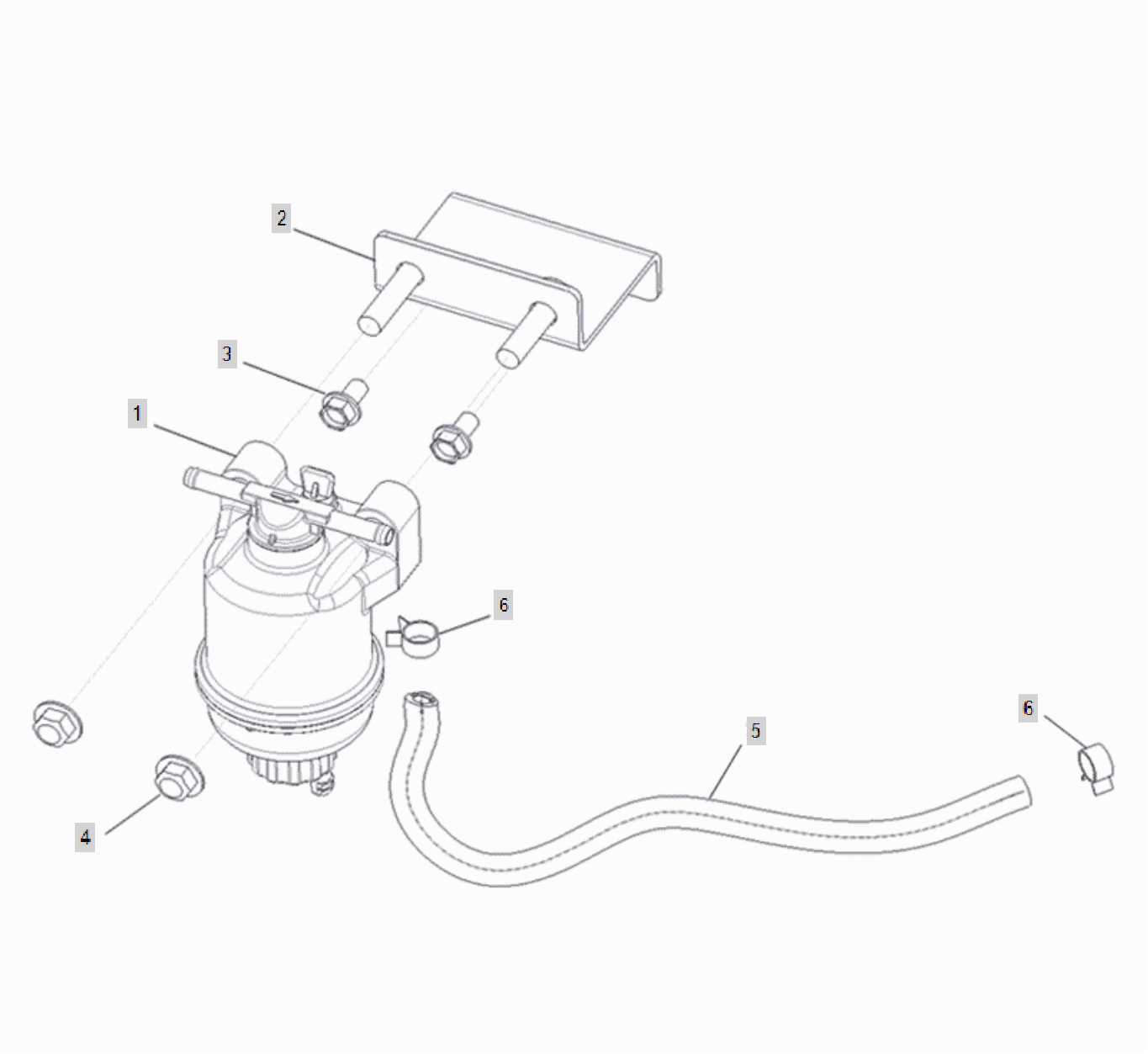

FIG 00133_15-3 4520R(2014~)	FUEL SYSTEM(2017.12)	Year/Month 2020/02

KeyNo.	Part Number	Part Name	Quantity	Other
1	EA00005318A	FUEL FILTER	1	
2	EA00005021A	FULE FILTER BRACTER ASS'Y	1	
3	26106-080162	SCREW,HEXFLANGEHEADCAP	2	
4	26367-100002	NUT,HEXAGONFLANGE	2	
5	EA00000173A	HOSE, FUEL ASSY	1	
6	23000-013000	Clip, Hose (Φ13)	2	

FIG 00133_16-1 4520R(2014~)	STARTING MOTOR	Year/Month 2020/02

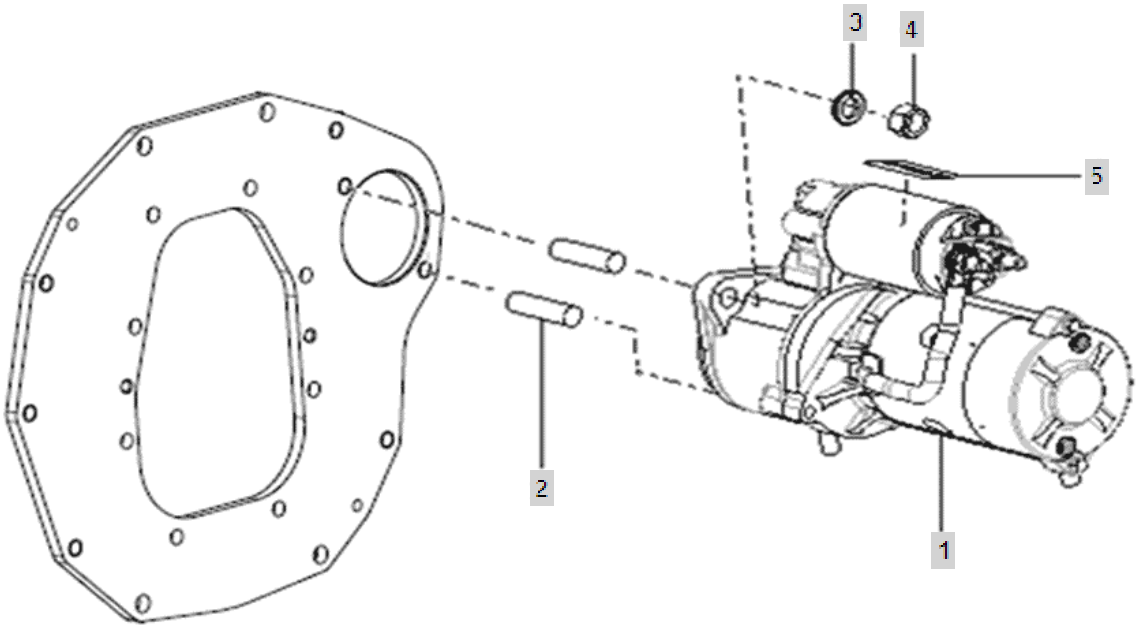

FIG 00133_16-1 4520R(2014~)	STARTING MOTOR	Year/Month 2020/02

KeyNo.	Part Number	Part Name	Quantity	Other
1	EA00003037C	STARTER	1	
2	26216-120302	STUDBOLT	1	
3	22217-120000	WASHER, SPRING (Φ 12)	1	
4	26716-120002	BOLT,CYLINDER HEAD(B)	1	
5	EA00001492A	NAME PLATE, STARTING MOTOR	1	

FIG 00133_16-2 4520R(2014~)	STARTING MOTOR(2016.11)	Year/Month 2020/02

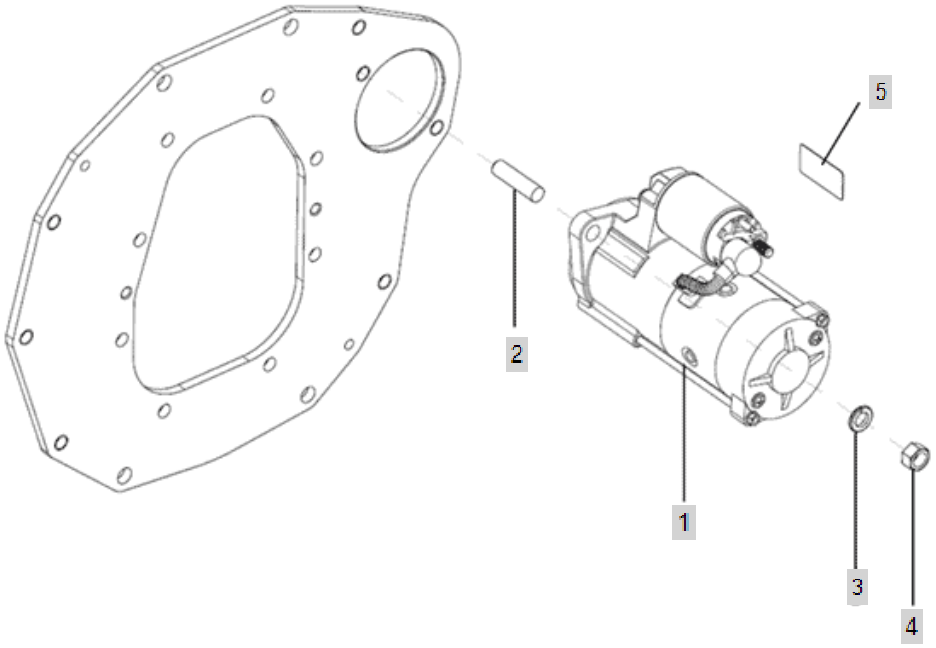

FIG 00133_16-2 4520R(2014~)	STARTING MOTOR(2016.11)	Year/Month 2020/02

KeyNo.	Part Number	Part Name	Quantity	Other
1	EA00004194A	STARTER	1	
2	26216-120302	STUDBOLT	1	
3	22217-120000	WASHER, SPRING (Φ 12)	1	
4	26716-120002	BOLT,CYLINDER HEAD(B)	1	
5	EA00001492A	NAME PLATE, STARTING MOTOR	1	

FIG 00133_18 4520R(2014~)	DPF & DPF APPLICATION SYSTEM_1	Year/Month 2020/02

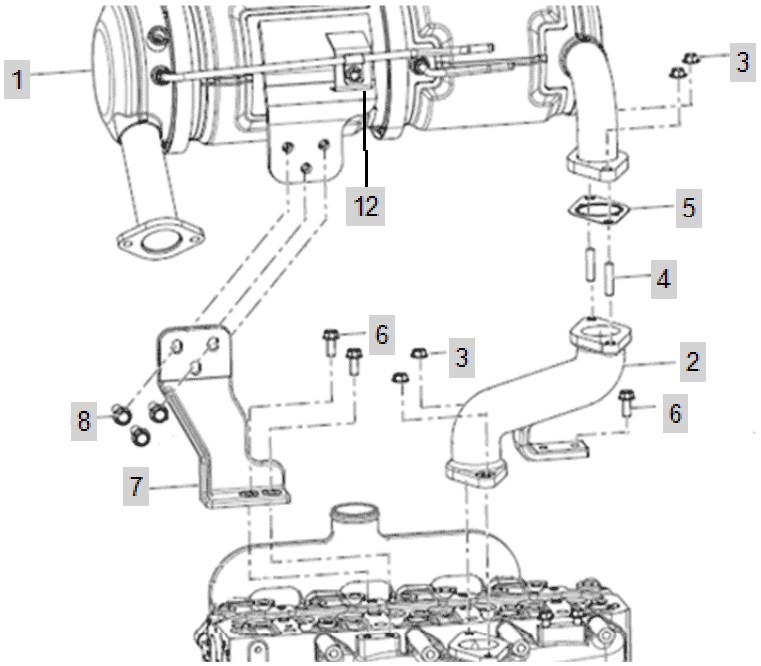

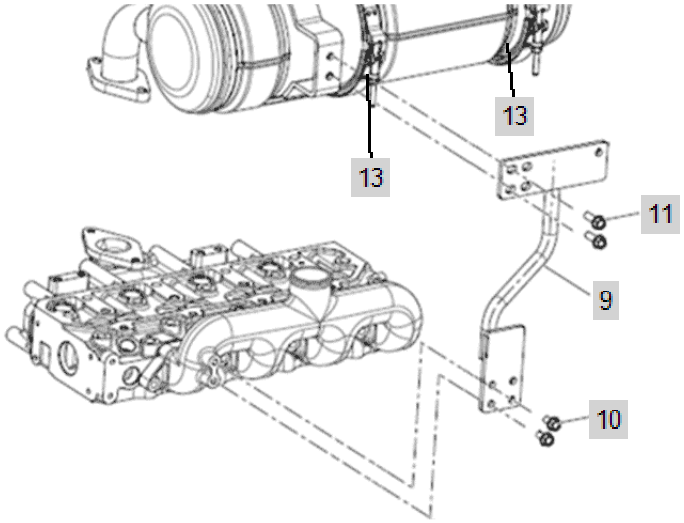

FIG 00133_18 4520R(2014~)	DPF & DPF APPLICATION SYSTEM_1	Year/Month 2020/02

KeyNo.	Part Number	Part Name	Quantity	Other
1	EA00003230C	DPF ASSY(5.66)	1	
2	EA00003137A	DPF_HOUSING_B	1	
3	26367-080002	HEX FLANGE NUT (Φ8)	4	
4	26216-080252	STUDBOLT	2	
5	EA00005692A	GASKET(DPF IN)	1	
5-1	HRA0600700A4	GASKET,MUFFLER	1	
6	26106-080202	SQR FLANGE BOLT	4	
7	EA00003136A	DPF_HOUSING	1	
8	26106-100302	HEXFLANGEBOLT	3	
9	EA00003192A	FUEL FILTER BRACKET(DPF)	1	
10	26106-080162	SCREW,HEXFLANGEHEADCAP	2	
11	26106-080252	SCREW,HEXFLANGEHEADCAP	2	
12	EA00003961A	SUB ASSY,DPF(DYNAQ 5.66")	1	
13	EA00003625A	V-CLAMP	2	

FIG 00133_19 4520R(2014~)	DPF & DPF APPLICATION SYSTEM_2	Year/Month 2020/02

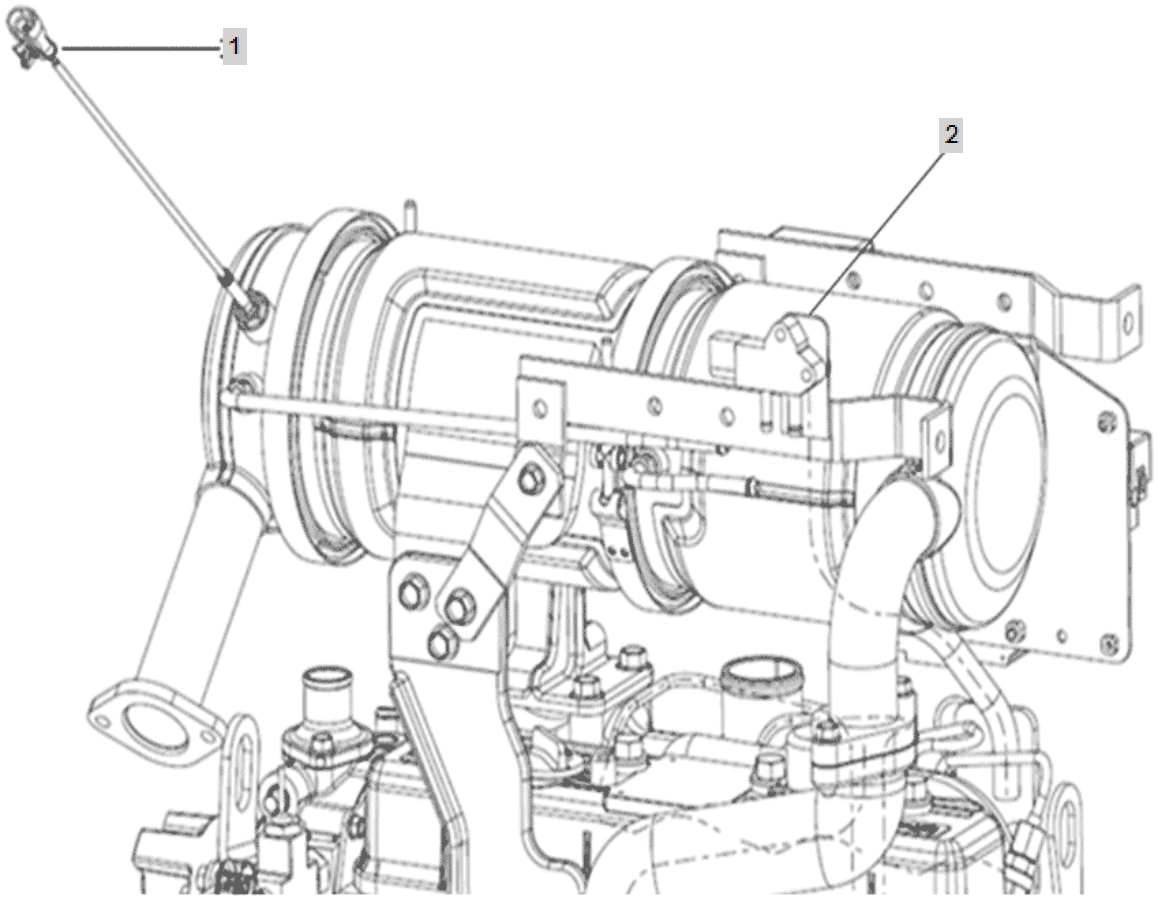

FIG 00133_19 4520R(2014~)	DPF & DPF APPLICATION SYSTEM_2	Year/Month 2020/02

KeyNo.	Part Number	Part Name	Quantity	Other
1	EA00003312A	EXHAUST GAS TEMP. SENSOR	1	
2	EA00003291A	DIFFERENTIAL PRESSURE SENSOR	1	

FIG 00133_20 4520R(2014~)	DATAPLATE	Year/Month 2020/02

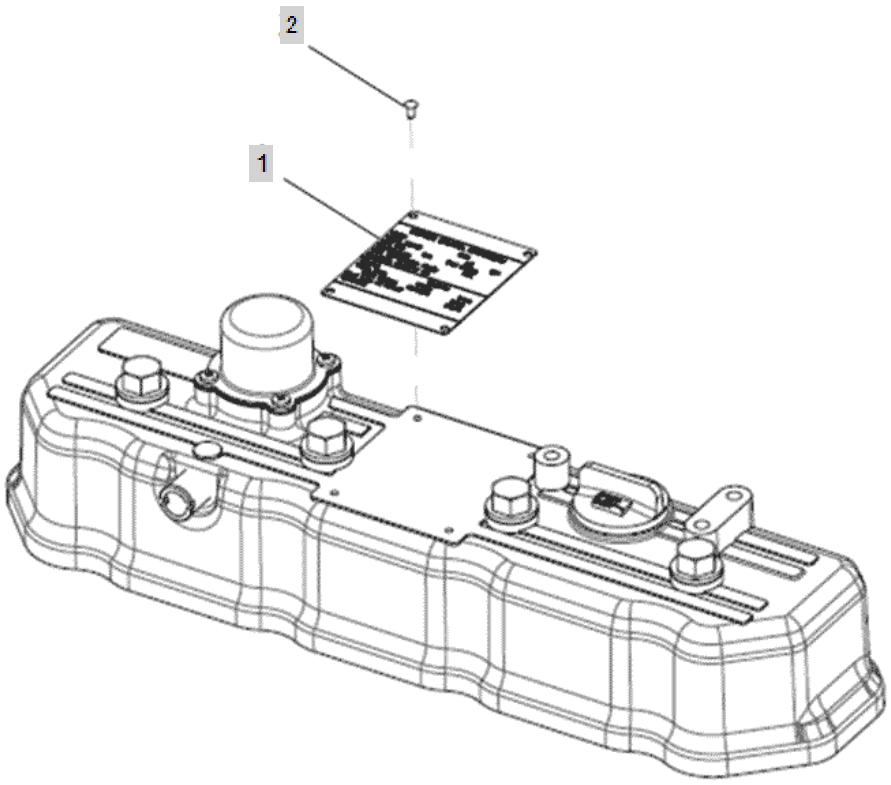

FIG 00133_20 4520R(2014~)	DATAPLATE	Year/Month 2020/02

KeyNo.	Part Number	Part Name	Quantity	Other
1	EA00003476B	DATA PLATE(A2300N2-UT_4)	1	
2	22685-320601	RIVET	4	

FIG 136TIER3-1 4520R(2014~)	BONNET SUPPORT-TIER3(2019.03~)	Year/Month 2020/02

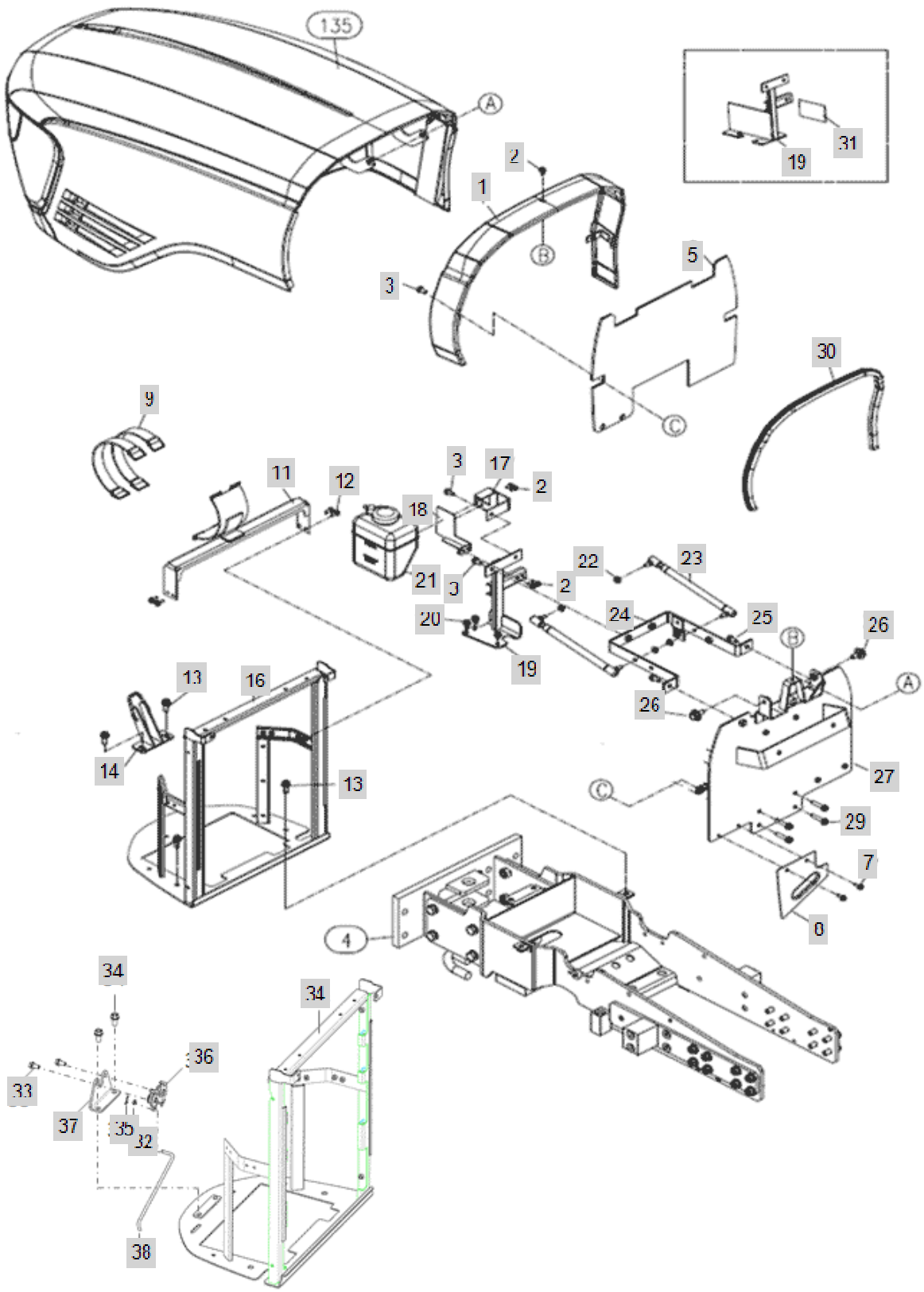

FIG 136TIER3-1 4520R(2014~)	BONNET SUPPORT-TIER3(2019.03~)	Year/Month 2020/02

KeyNo.	Part Number	Part Name	Quantity	Other
1	TA00024296D	EXTEMSION COVER	1	
2	26106-060142	BOLT	2	
3	26106-080162	SCREW,HEXFLANGEHEADCAP	4	
4	26106-080222	SCREW, HEX FLANGE HEAD CAP	4	
5	TA00023917B	SPONGE	1	
7	26106-060162	HEXFLANGEBOLT	10	
8	TA00025502B	PLATE	1	
9	TZD6890000A4	BAND,AIRCLEANERHOLDING	2	
11	TA00025580C	BRACKET AIR-CLEANER ASS'Y	1	
12	26106-060122	HEX BOLT (6-12)	4	
13	26106-100202	HEX BOLT, (10-20)	4	
14	TA00022936A	HOOD LOCK	1	
16	TA00025520F	FRAME ASS'Y GRILL	1	
17	TA00025331A	BRACKET	1	
18	TA00023210B	BRACKET	1	
20	26106-080122	Bolt, Hexa (8-12)	3	
21	TA00023608C	RESERVOIR TANK, COOLING WATER	1	
22	26367-080002	HEX FLANGE NUT (Φ8)	4	
23	TA00023455B	GAS SPRING	2	
24	TA00025691A	BRACKET ASS'Y	1	
25	26106-080182	SCREW,HEXFLANGEHEADCAP	2	
26	TA00022981A	BONNET BOLT	2	
27	TA00029767C	BONNET SUPPORT ASM	1	
29	26106-080402	SCREW,HEXFLANGEHEADCAP	4	
30	TA00026771C	STRIP -> TA00033052A	1	
31	TA00027025A	SPONGE	1	
32	22137-060000	WASHER , PLAIN	1	
33	26106-080162	SCREW,HEXFLANGEHEADCAP	2	
34	26106-100202	HEX BOLT, (10-20)	2	
35	RR47070000B4	PIN 6, COME-OFF SNAP	1	
36	TA00053140A	LATCH ASSY	1	
37	TA00053544A	LATCH BRACKET	1	
38	TA00058562A	LOAD	1	

FIG C001 4520R(2014~)	LEVER ACCELERATOR	Year/Month 2020/02

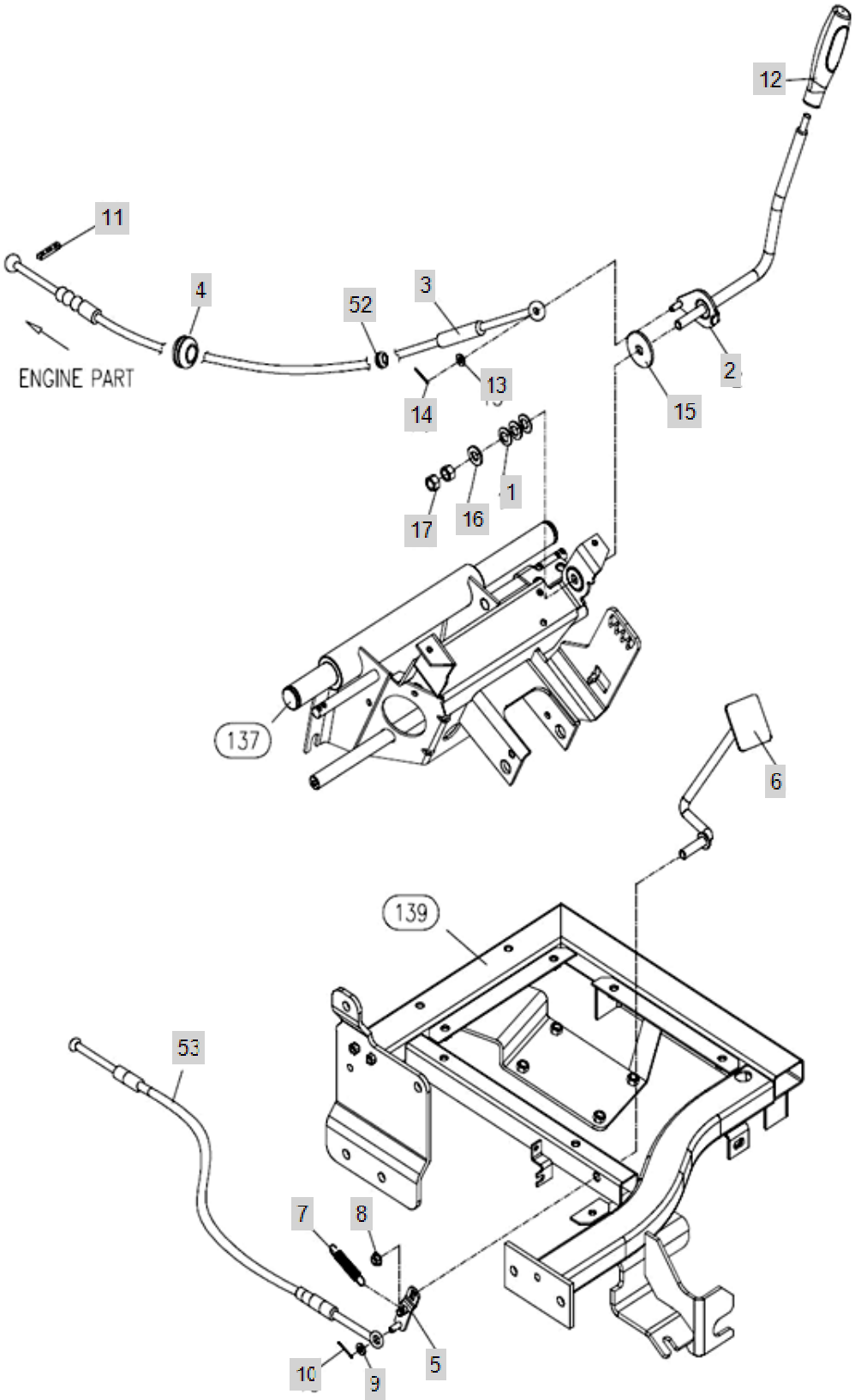

FIG C001 4520R(2014~)	LEVER ACCELERATOR	Year/Month 2020/02

KeyNo.	Part Number	Part Name	Quantity	Other
1	TC45010000A4	SPRINGWASHER10	3	
2	TA00022978A	ACCELERATOR LEVER	0	
3	TC45080000A4	MATT	1	
4	TC45070000A4	MATT	1	
5	TA00020586A	ARM		
6	TA00017893C	ACCELEATOR PADAL ASS'Y	0	
7	26367-060002	Nut, Hexa (Φ6)	1	
8	TT98200000A4	RETURNSPRING	1	
9	22137-060000	WASHER , PLAIN	1	
10	22417-160180	PIN , COTTER (1-18)	1	
11	TC45040000A4	RUBBER	1	
12	TA00056003A	KNOD, ACCELERATOR	1	
12-1	TA00015801B	KNOB, ACCELERATOR	1	delete
13	22137-060000	WASHER , PLAIN	1	
14	22417-160180	PIN , COTTER (1-18)	1	
15	TC45060000A4	FRICTIONPLATE	0	
16	22137-100000	WASHER, PLAIN (Φ 10)	1	
17	26716-100002	Nut, Hexa (Φ10)	2	
52	TC45410000B3	WIRE,ACCELERATOR	1	
53	TC46410000C3	WIRE, ACCELERATOR PEDAL	0	

FIG C002-1 4520R(2014~)	Steering_Column	Year/Month 2020/02

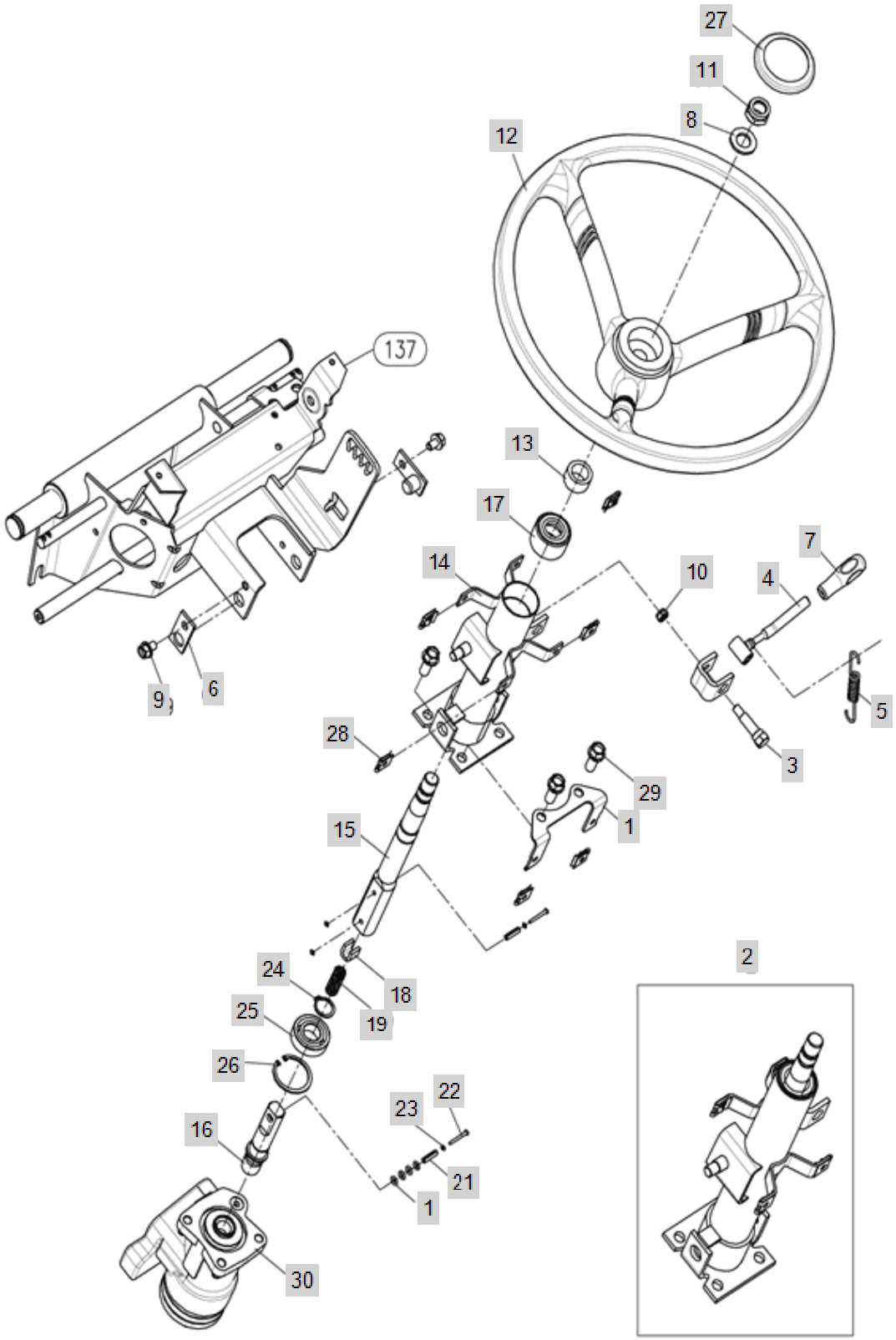

FIG C002-1 4520R(2014~)	Steering_Column	Year/Month 2020/02

KeyNo.	Part Number	Part Name	Quantity	Other
1	TC65010000A4	BRACKET(COLUMCOVERR)	1	
2	NT0141A000A2	COLUMN ASS'Y	1	
2-1	NT01410000A2	COLUMASS`Y	1	
3	TC65030000A4	TILTLEVERPIN	1	
4	TC65040000A4	TILTLEVER	1	
5	TC65050000A4	TILTSPRING	1	
6	TC65060000A4	TILTPINASS'Y	2	
7	TA00015785A	LEVER, STAND	1	
8	22137-160000	WASHER, PLAIN (Φ 16)	0	
9	26106-080122	Bolt, Hexa (8-12)	1	
10	26347-080002	Unut	1	
11	26357-160002	NUT	1	
12	TZ29030000A1	STEERING WHEEL	1	
13	TC65130000A4	COVER,SHAFT	1	
14	TC65020100A2	STEERINGCLUMN	1	
15	FT29150000A3	STEERINGSHAFT	1	
16	TC65020300A9	STEERINGSHAFT1	1	
17	TC65020400A9	COLUMNBUSH	1	
18	TC65020500A4	LINER	1	
19	TC65020600A9	SPRING,COIL	1	
20	24311-000060	O-RING, DYNAMIC (Φ6)	4	
21	22351-050020	PIN, SPRING (5-20)	2	
22	22621-300260	RIVET	2	
23	22137-030000	WASHER, PLAIN (Φ 03)	4	
24	22242-000200	SNAP RING, SHAFT (Φ 20)	1	
25	24107-060044	Bearing, Ball (#6004) Dubble Cap	1	
26	22252-000420	RING, CIRCLIP (Φ 42)	1	
27	TA00026432A	STEERING WHEEL CAP (BRANSON)	1	
28	TTD7110000A4	SPEEDNUTNS5008	4	
29	26136-100252	SCREW, HEX FLANGE HEAD CAP	3	
30	NT33011000A3	PST VALVE ASSY	1	

FIG C002-2 4520R(2014~)	STEERING COLUMN	Year/Month 2020/02

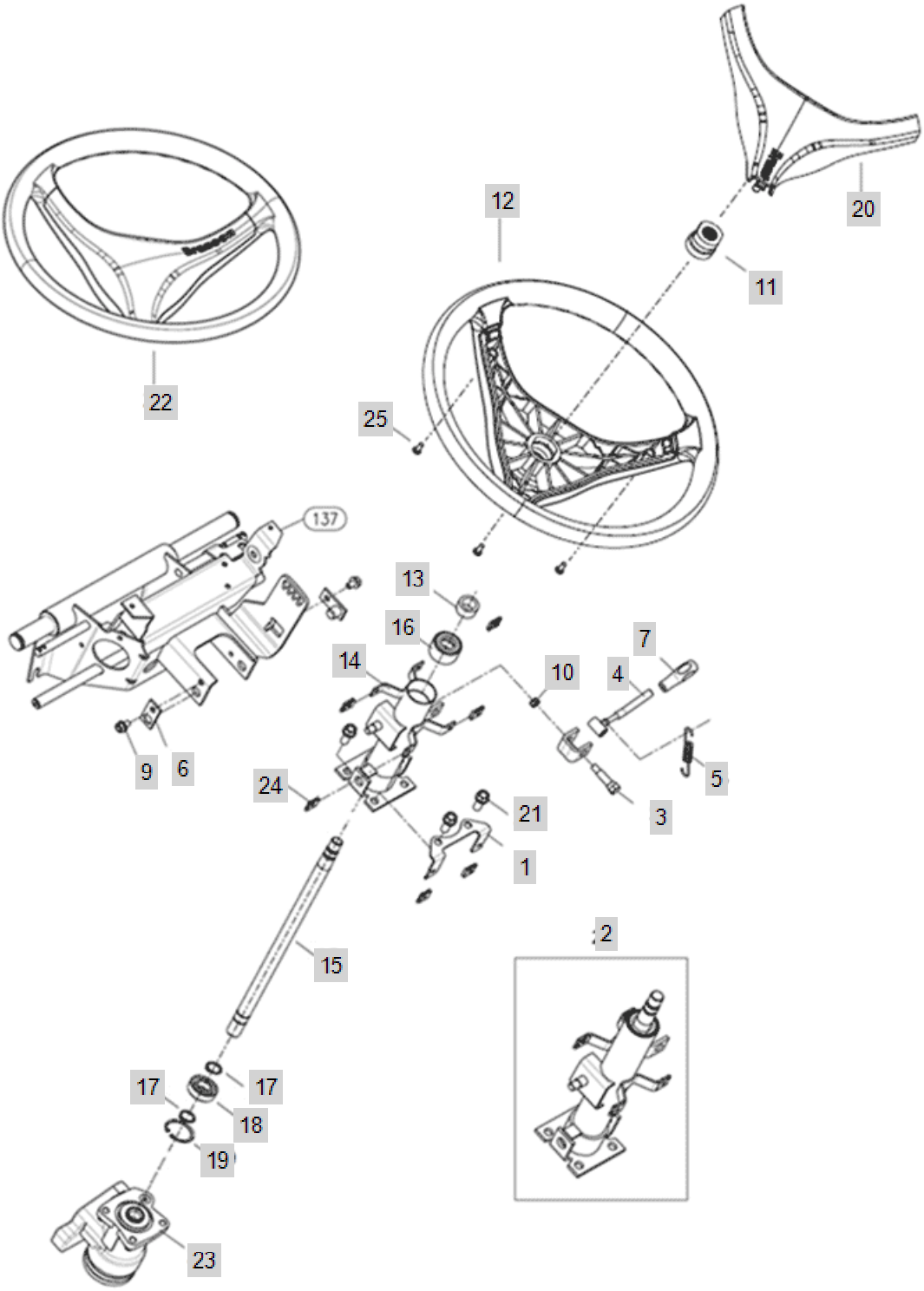

FIG C002-2 4520R(2014~)	STEERING COLUMN	Year/Month 2020/02

KeyNo.	Part Number	Part Name	Quantity	Other
1	TC65010000A4	BRACKET(COLUMCOVERR)	1	
2	NT0141A000A2	COLUMN ASS'Y	1	
3	TC65030000A4	TILTLEVERPIN	1	
4	TC65040000A4	TILTLEVER	1	
5	TC65050000A4	TILTSPRING	1	
6	TC65060000A4	TILTPINASS'Y	2	
7	TA00015785A	LEVER, STAND	1	
9	26106-080122	Bolt, Hexa (8-12)	2	
10	26347-080002	Unut	1	
11	TA00048436A	U-NUT	1	
12	TA00048049A	STEERING WHEEL	1	
13	TC65130000A4	COVER,SHAFT	1	
14	TC65020100A2	STEERINGCLUMN	1	
15	TA00054109A	SHAFT, STEERING	1	
16	TC65020400A9	COLUMNBUSH	2	
17	22242-000200	SNAP RING, SHAFT (Φ 20)	1	
18	24107-060044	Bearing, Ball (#6004) Dubble Cap	1	
19	22252-000420	RING, CIRCLIP (Φ 42)	1	
20	TA00048050A	COVER	3	
21	26136-100252	SCREW, HEX FLANGE HEAD CAP	1	
22	TA00048048B	STEERING WHEEL ASS'Y	1	
23	NT33010000C3	P.S.TVALVE	1	
24	TTD7110000A4	SPEEDNUTNS5008	6	
25	22587-480124	TAPPING SCREW	3	

FIG C003-1 4520R(2014~)	Shuttle_Assy	Year/Month 2020/02

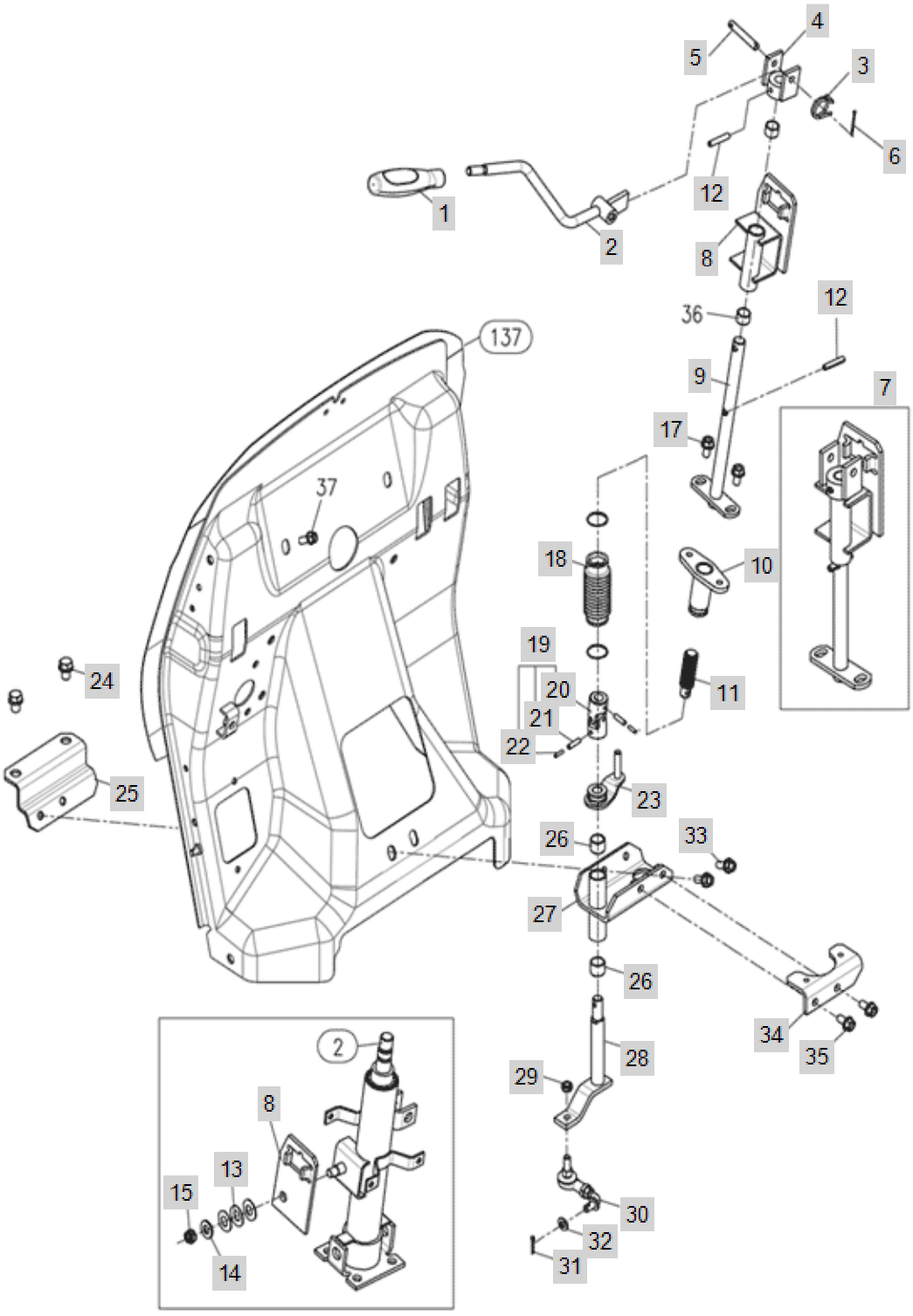

FIG C003-1 4520R(2014~)	Shuttle_Assy	Year/Month 2020/02

KeyNo.	Part Number	Part Name	Quantity	Other
1	TA00056013A	KNOB (LEVER SHUTTLE)	1	
1-1	TA00015799B	KNOB, SHUTTLE LEVER	1	
2	TA00028926A	REVERSER LEVER -> NT03010000C1	0	
3	TA00028935A	RETURN SPRING(F_R)	0	
4	TC94040300A3	HOLDER,REVERSERLEVER	0	
5	TC94050000A4	PIN(8*52)	0	
6	22417-200300	PIN , COTTER (2-30)	0	
7	TA00002840B	REVERSER BRACKET ASSY	0	
8	TA00003045A	BRACKET ASS'Y	0	
9	TA00002841A	COUPLING SHAFT	0	
10	TA00003047A	COUPLING -> TA00002840A	0	
11	TA00003049A	SHAFT(INSIDE)-> TA00002840A	0	
12	22351-060032	PIN, SPRING (6-32)	0	
13	TC94060000A4	PRING12	0	
14	22137-100000	WASHER, PLAIN (Φ 10)	0	
15	26347-100002	U-NUT	0	
17	26106-080162	SCREW,HEXFLANGEHEADCAP	0	
18	TA00017481A	JOINT BOOT	0	
19	TC94020300A4	JOINT ASSY	0	
20	TC94020301A9	JOINT	0	
21	22351-030020	PIN, SPRING (3X20)	0	
22	22351-050020	PIN, SPRING (5-20)	0	
23	TA00017493A	JOINT ARM ASS'Y	0	
24	26013-100252	SCREW,CAPTIVEWASHERCAP	0	
25	TA00018462A	FIX BRACKET ASS'Y	0	
26	24550-016150	DRYBUSH	0	
27	TA00017490A	BRACKET REVERSER SHAFT	0	
28	TA00017487A	SHAFT, REVERSER	0	
29	26347-080002	Unut	0	
30	TA00002832A	ROD ASS'Y(F-R)	0	
31	22417-250200	PIN , COTTER (2-20)	0	
32	22117-080000	WASHER, PLAIN (Φ 08)	0	
33	26106-080202	SQR FLANGE BOLT	0	
34	TA00017502A	SW BRACKET ASS'Y	0	
35	26106-080162	SCREW,HEXFLANGEHEADCAP	0	
36	24550-015120	DRYBUSH	0	
37	26106-100202	HEX BOLT, (10-20)	0	

FIG C003-2 4520R(2014~)	SHUTTLE ASS'Y	Year/Month 2020/02

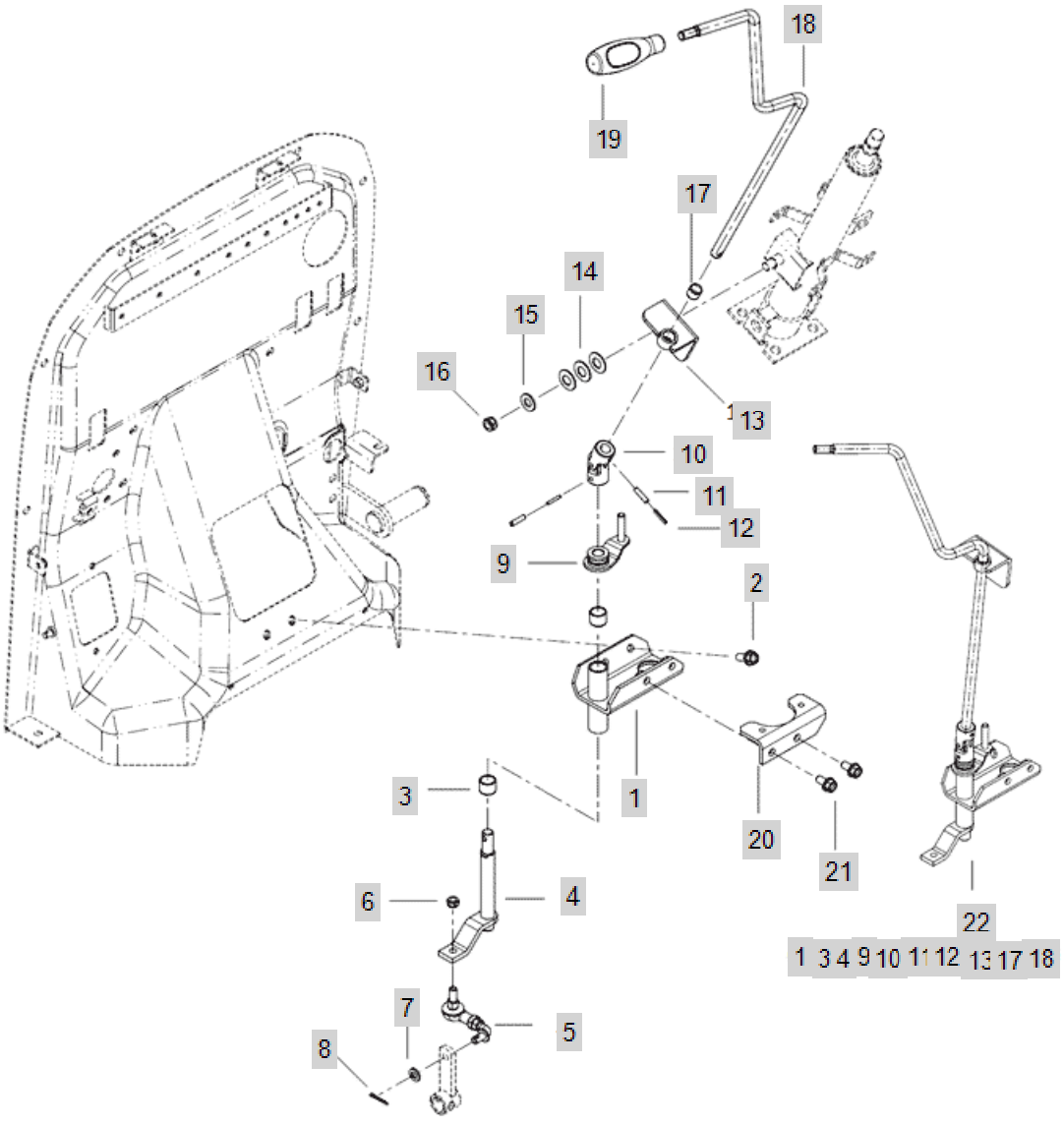

FIG C003-2 4520R(2014~)	SHUTTLE ASS'Y	Year/Month 2020/02

KeyNo.	Part Number	Part Name	Quantity	Other
1	TA00017490C	BRACKET REVERSER SHAFT	1	
2	26106-080202	SQR FLANGE BOLT	2	
3	24550-016150	DRYBUSH	2	
4	TA00017487D	SHAFT REVERSER	1	
5	TA00002832A	ROD ASS'Y(F-R)	1	
6	26347-080002	Unut	1	
7	22117-080000	WASHER, PLAIN (Φ 08)	1	
8	22417-250200	PIN , COTTER (2-20)	1	
9	TA00017493A	JOINT ARM ASS'Y	1	
10	TA00060731A	JOINTASS`Y	1	
10-1	TC94020300A4	JOINT ASSY	1	delete
11	22351-050020	PIN, SPRING (5-20)	2	
12	22351-030020	PIN, SPRING (3X20)	2	
13	TA00047045A	BRACKET ASSY	1	
14	TC94060000A4	PRING12	3	
15	22137-100000	WASHER, PLAIN (Φ 10)	1	
16	26347-100002	U-NUT	1	
17	24550-012120	DRYBUSH12X12	1	
18	TA00047186B	LEVER, SHUTTLE	1	
19	TA00056013A	KNOB (LEVER SHUTTLE)	1	
19-1	TA00015799B	KNOB, SHUTTLE LEVER	1	delete
20	TA00017502A	SW BRACKET ASS'Y	1	
21	26106-080162	SCREW,HEXFLANGEHEADCAP	2	
22	TA00047637C	REVERSE RLEVER ASSY (CABIN)	1	

FIG C004D 4520R(2014~)	Front_Axle_Bracket	Year/Month 2020/02

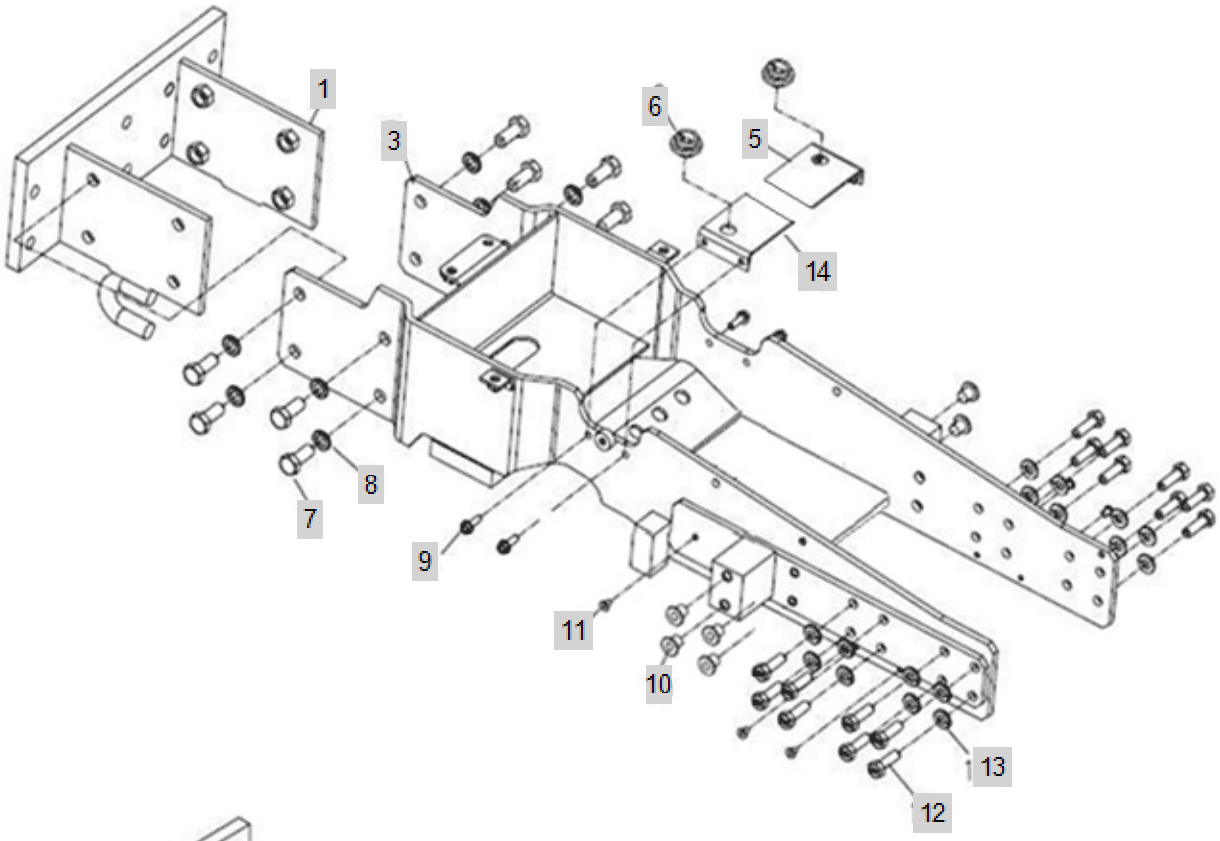

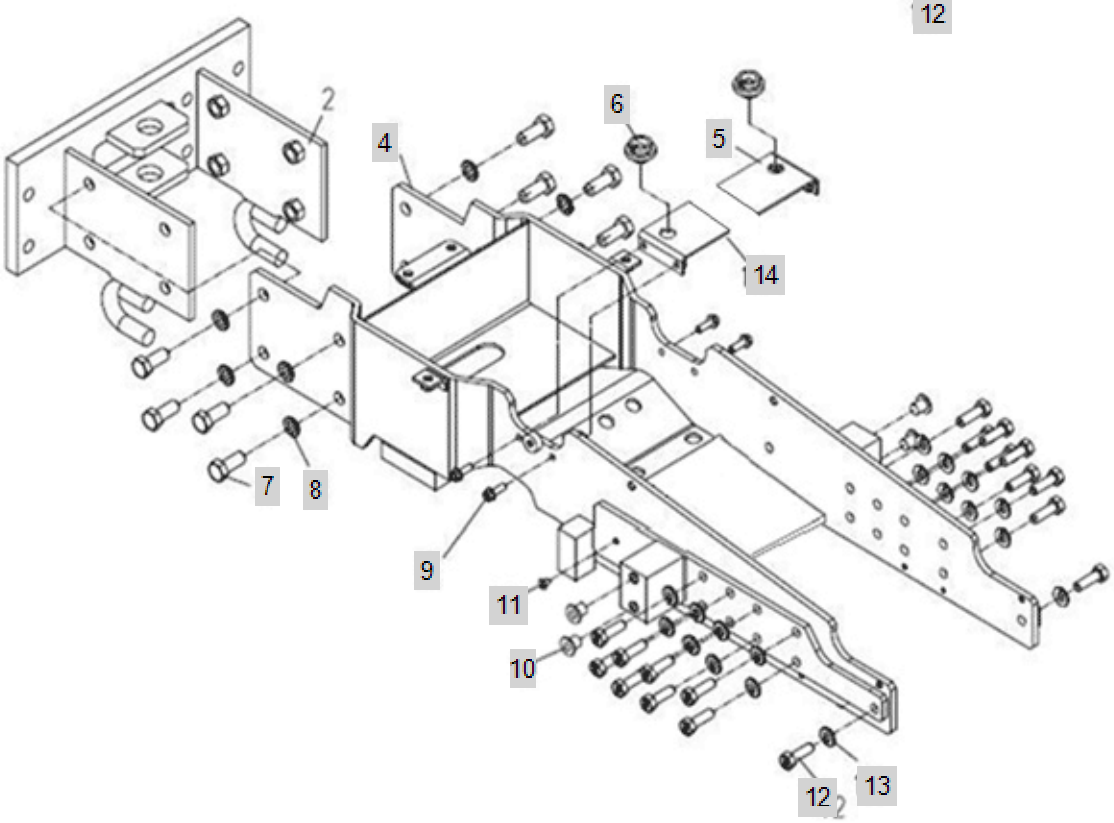

FIG C004D 4520R(2014~)	Front_Axle_Bracket	Year/Month 2020/02

KeyNo.	Part Number	Part Name	Quantity	Other
1	TA00028440A	Front Hitch Plate Ass'y	1	
3	TA00025921H	BRACKET ASS'Y FRONT AXLE	1	
4	TA00026011H	4520R,5020R BRACKET ASS'Y FRONT AXLE	1	
5	TA00024173A	BRACKET ASSY	1	
6	HRA1203300A4	RUBEER, VIBRATION PROOF	2	
7	26116-160402	BOLT	8	
8	22217-160000	WASHER, SPRING (Φ 16)	8	
9	26106-080252	SCREW,HEXFLANGEHEADCAP	4	
10	FB08090000A4	PLUG	4	
11	TB26060000A4	PLUGRUBBER	6	
12	TT08230000A4	BOLT	16	
13	TT08220000A4	LOCKSPRINGWASHER	16	
14	TA00037416A	RADIATOR_BRK	1	

FIG C004D-2 4520R(2014~)	FRONT AXLE BRACKET	Year/Month 2020/02

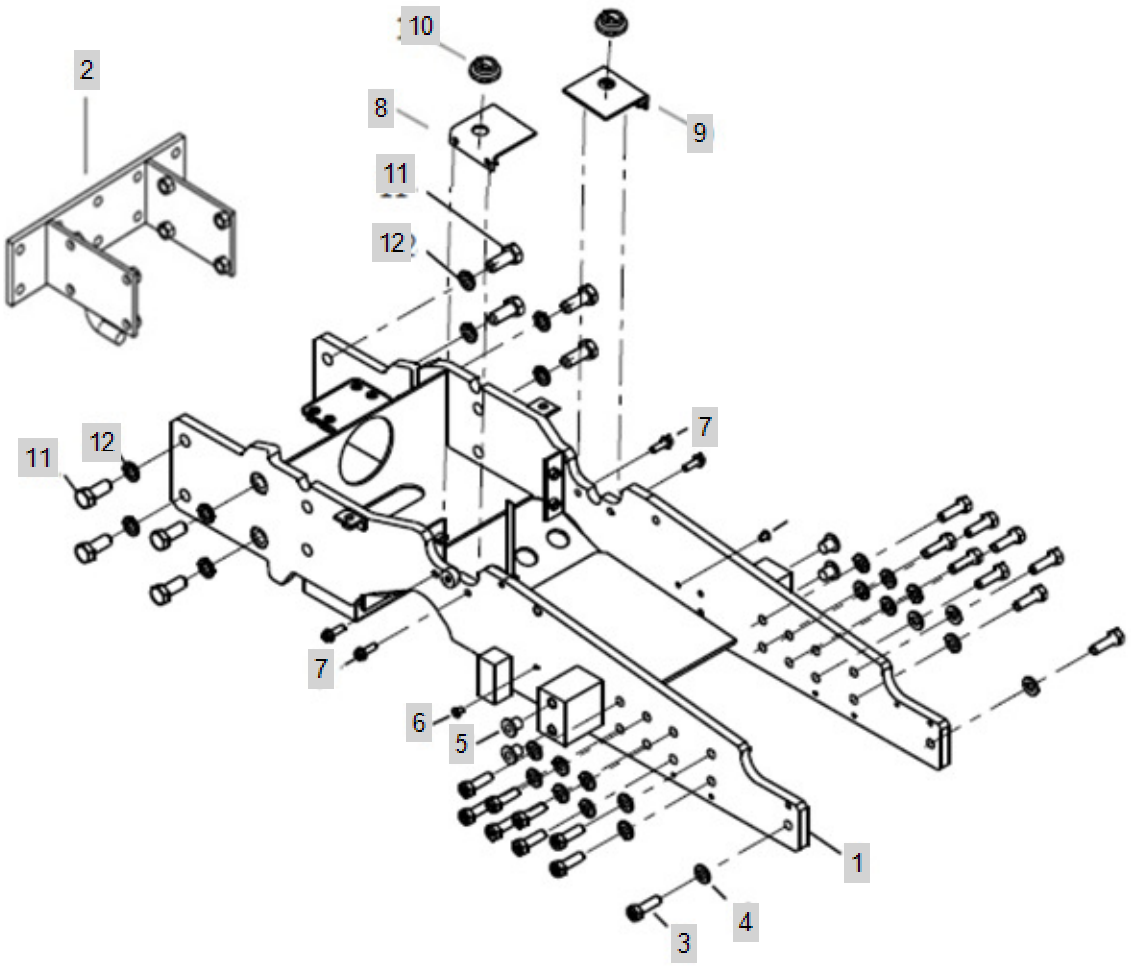

FIG C004D-2 4520R(2014~)	FRONT AXLE BRACKET	Year/Month 2020/02

KeyNo.	Part Number	Part Name	Quantity	Other
1	TA00001548C	FRONT HITCH ASSY	1	
2	TA00046585F	F/A BRACKET ASSY_DYNAQ	1	
3	TA00037418A	RADIATOR_BRK	1	
4	TA00037416A	RADIATOR_BRK	1	
5	HRA1203300A4	RUBEER, VIBRATION PROOF	2	
6	26116-160402	BOLT	8	
7	22217-160000	WASHER, SPRING (Φ 16)	8	
8	FB08090000A4	PLUG	4	
9	TB26060000A4	PLUGRUBBER	6	
10	TT08230000A4	BOLT	18	
11	TT08220000A4	LOCKSPRINGWASHER	18	
12	26106-080252	SCREW,HEXFLANGEHEADCAP	4	

FIG C009-1 4520R(2014~)	Center_Pin_Support	Year/Month 2020/02

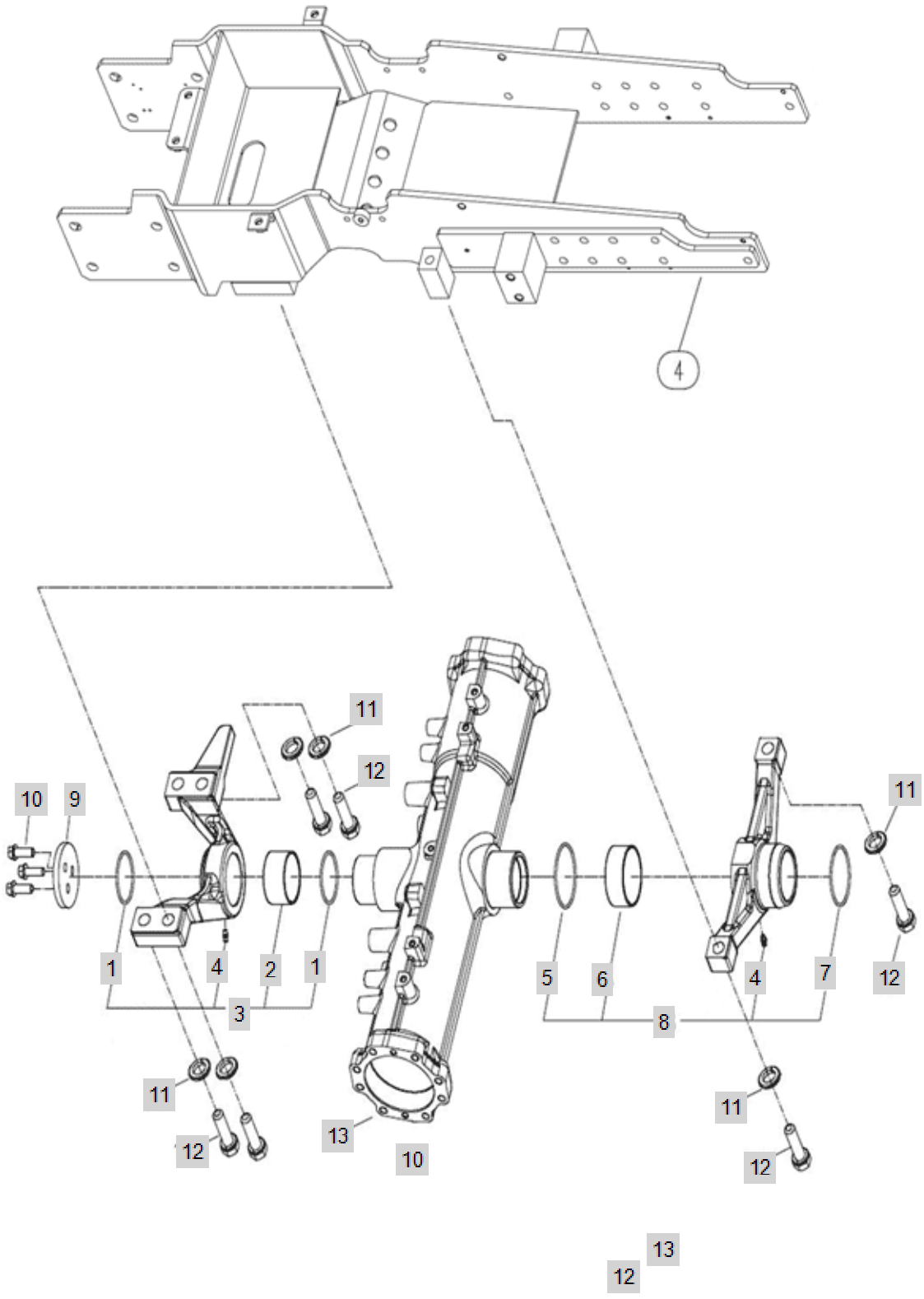

FIG C009-1 4520R(2014~)	Center_Pin_Support	Year/Month 2020/02

KeyNo.	Part Number	Part Name	Quantity	Other
1	24321-000600	SEAL,ORING	0	
2	TA00034105A	BUSH	0	
3	TA00034104A	AXLE SUPPORT(FRONT) ASS'Y	0	
4	24764-060000	GREASE NIPPLE	0	
5	24321-000750	SEAL,ORING	0	
6	TA00034103A	BUSH	0	
7	24321-000700	O-RING1AG-70	0	
8	TA00034102A	AXLE SUPPORT (REAR)		
9	TC55020000A4		0	
10	26106-100302	HEXFLANGEBOLT	0	
11	22217-160000	WASHER, SPRING (Φ 16)	0	
12	26116-160602	HEX BOLT	0	
13	TA00033449A	CASE, FRONT AXLE	0	

FIG C009-2 4520R(2014~)	CENTER PIN SUPPORTER(2018.03~)	Year/Month 2020/02

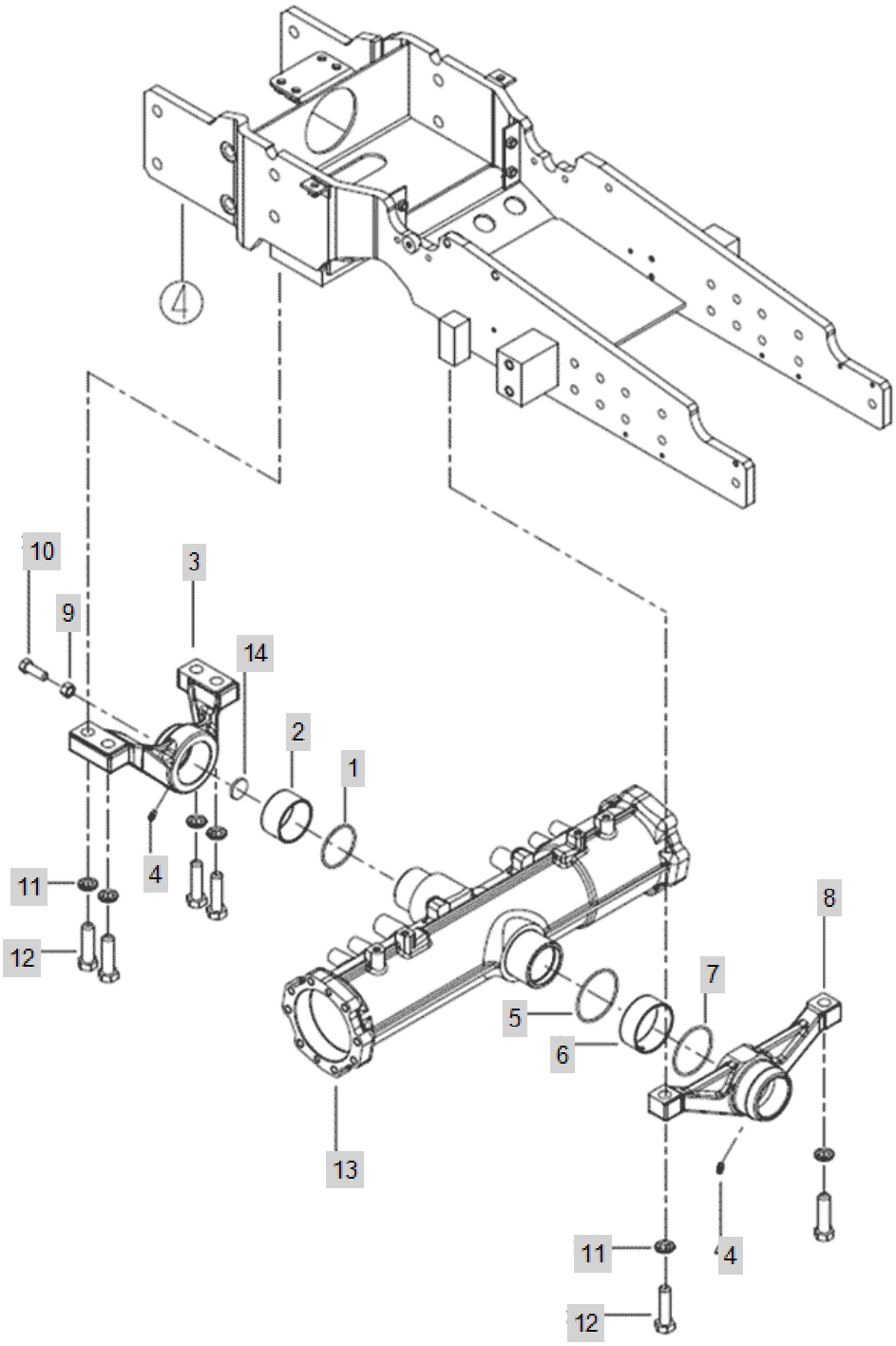

FIG C009-2 4520R(2014~)	CENTER PIN SUPPORTER(2018.03~)	Year/Month 2020/02

KeyNo.	Part Number	Part Name	Quantity	Other
1	24321-000600	SEAL,ORING	1	
2	TA00034105A	BUSH	1	
3	TA00048801A	FRONT AXLE SUPPROT ASS'Y	1	
4	24764-060000	GREASE NIPPLE	2	
5	24321-000750	SEAL,ORING	1	
6	TA00034103A	BUSH	1	
7	24321-000700	O-RING1AG-70	1	
8	TA00034102C	AXLE SUPPORT (REAR)	0	
9	26716-120002	BOLT,CYLINDER HEAD(B)	1	
10	26116-120354	BOLT	1	
11	22217-160000	WASHER, SPRING (Φ 16)	6	
12	26116-160602	HEX BOLT	6	
13	TA00048800A	CASE, FRONT AXLE	1	
14	TA00048803A	WASHER	1	

FIG C010D 4520R(2014~)	Tie_Rod	Year/Month 2020/02

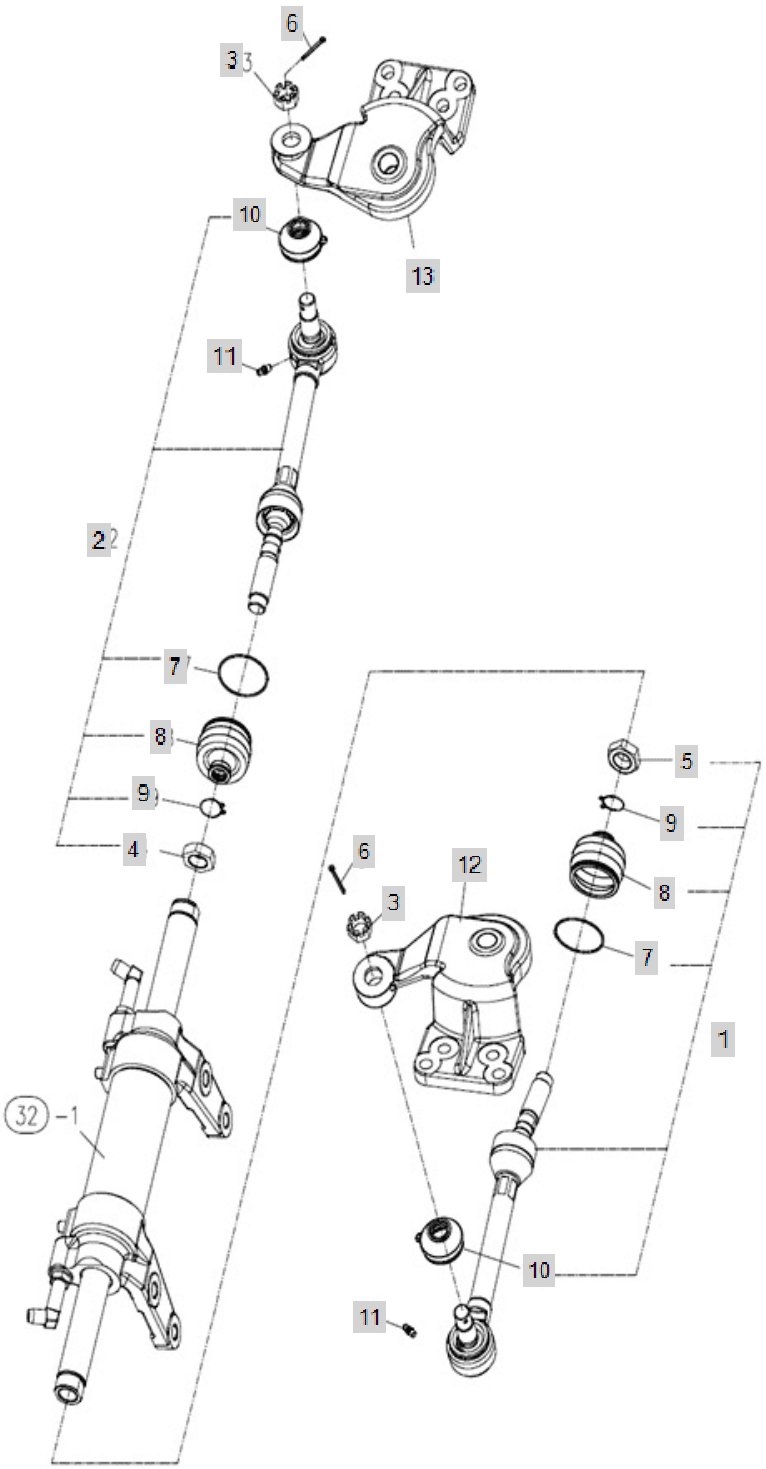

FIG C010D 4520R(2014~)	Tie_Rod	Year/Month 2020/02

KeyNo.	Part Number	Part Name	Quantity	Other
1	TA00016315B	TIE ROD ASSY (LH)	1	
2	TA00016316B	TIE ROD ASSY (RH)	1	
3	26877-160002	STUDNUTM16	2	
4	TC56040000B4	NUT M20*1.5	1	
5	TC56050000B4	nut	1	
6	22417-300250	PIN , COTTER (3-25)	2	
7	TC56010106A4	SET RING	2	
8	TC56010105A4	DUST COVER	2	
9	TC56010107A4	CLIP	2	
10	TT10030000A9	DUSTCOVER	2	
11	24764-060000	GREASE NIPPLE	2	
12	TA00033465E	NUCKLE ARM (LH)	1	
13	TA00033467E	NUCKLE ARM (RH)	1	

FIG C012-1 4520R(2014~)	Ring_Gear_Differential_Gear	Year/Month 2020/02

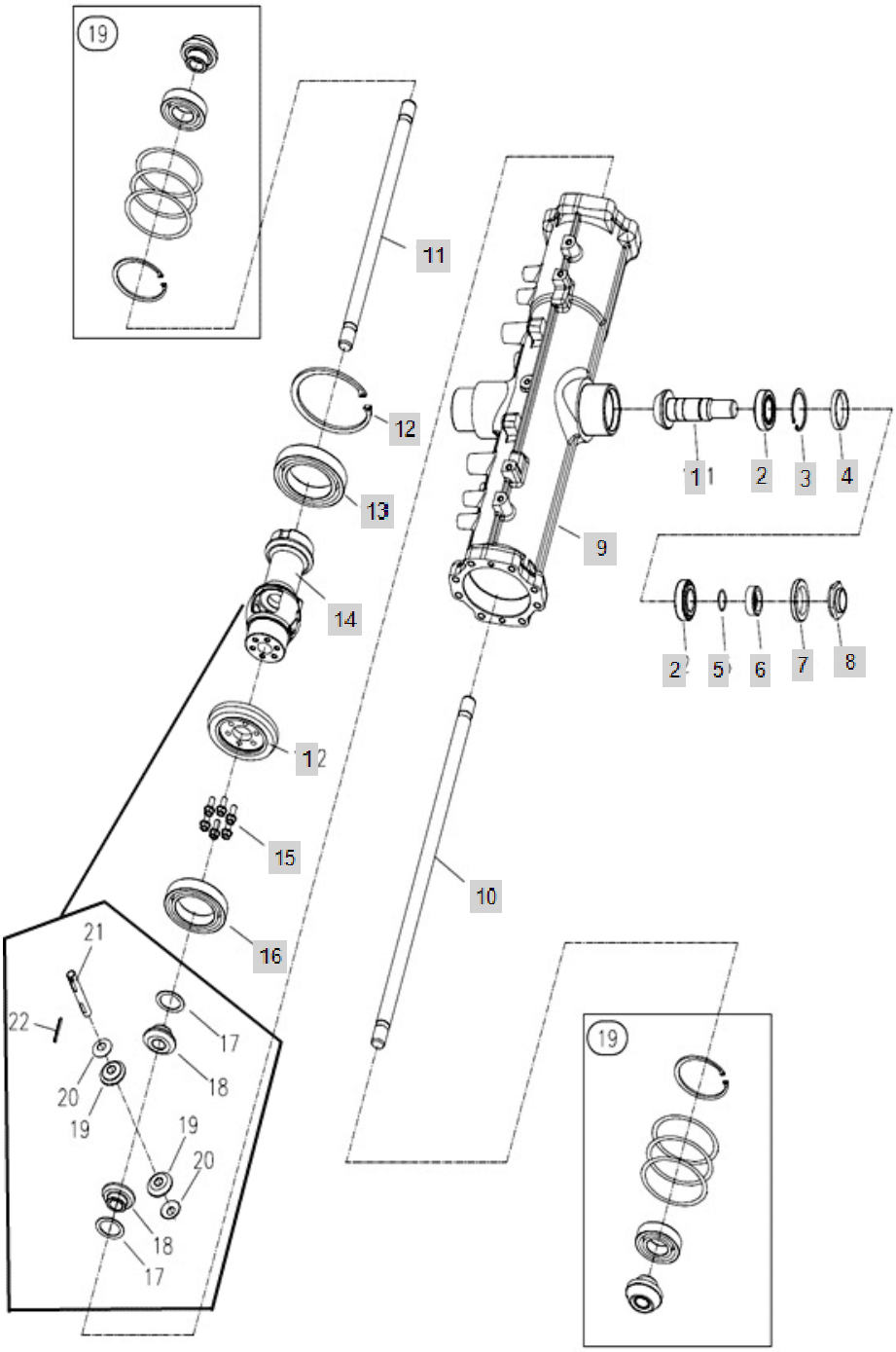

FIG C012-1 4520R(2014~)	Ring_Gear_Differential_Gear	Year/Month 2020/02

KeyNo.	Part Number	Part Name	Quantity	Other
1	TA00033454A	RING GEAR ASSY		
1-1	NSS		0	
1-2	NSS		0	
2	24141-320060	BEARING, ROLLER (#32-00-60)	0	
3	22252-000550	RING, CIRCLIP (Φ 55)	0	
4	TA00033478A	SPACER	0	
5	24311-000300	O RING(P TYPE)	0	
6	TA00033471A	BUSH	0	
7	24421-405508	OIL SEAL	0	
8	TA00033472A	NUT	0	
9	TA00033449A	CASE, FRONT AXLE	0	
10	TA00033827A	1ST SHAFT	0	
11	TA00033828A	1ST SHAFT	0	
12	22252-001100	RING, CIRCLIP (Φ110)	0	
13	24101-060144	BALL BEARING (#6014)	0	
14	TA00040271A	DIFFERENTIAL ASSY	0	
15	26106-080202	SQR FLANGE BOLT	0	
16	24101-060134	BALL BEARING (#6013)	0	
17	NSS		0	
18	NSS		0	
19	NSS		0	
20	NSS		0	
21	NSS		0	
22	22351-040040	PIN, SPRING (4-04)	0	

FIG C012-2 4520R(2014~)	RING GEAR, DIFFERENTIAL GEAR	Year/Month 2020/02

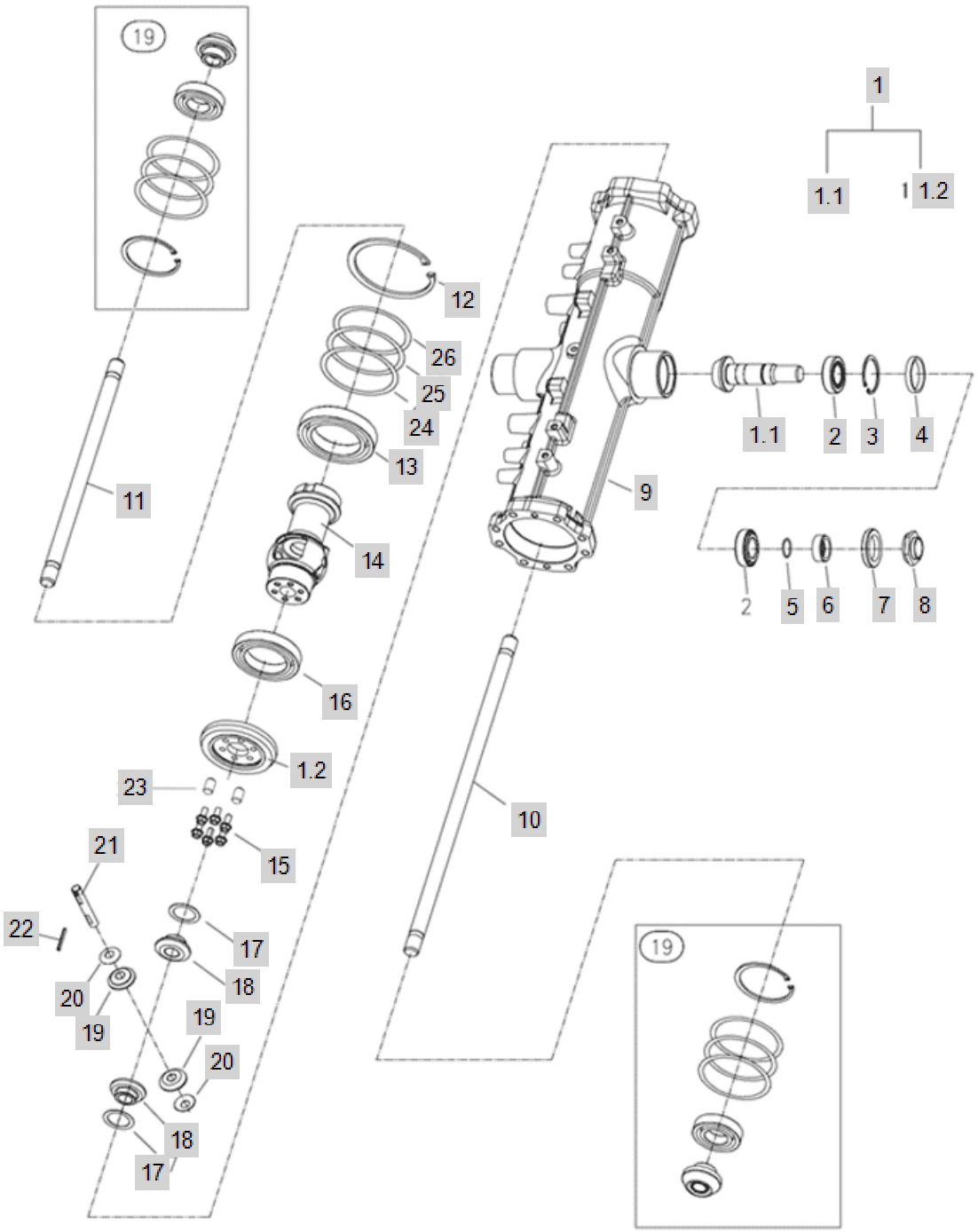

FIG C012-2 4520R(2014~)	RING GEAR, DIFFERENTIAL GEAR	Year/Month 2020/02

KeyNo.	Part Number	Part Name	Quantity	Other
1	TA00033454C	RING GEAR ASSY	1	
1.1	TA00033455B	COUNT SHAFT	1	
1.2	TA00033456C	RING GEAR	1	
2	24141-320060	BEARING, ROLLER (#32-00-60)	2	
3	22252-000550	RING, CIRCLIP (Φ 55)	1	
4	TA00033478A	SPACER	1	
5	24311-000300	O RING(P TYPE)	1	
6	TA00033471A	BUSH	1	
7	24421-405508	OIL SEAL	1	
8	TA00033472A	NUT	1	
9	TA00033449A	CASE, FRONT AXLE	1	
10	TA00033466A	FRONT 1ST AXLE LH	1	
11	TA00033462A	FRONT 1ST SHAFT RH	1	
12	22252-001100	RING, CIRCLIP (Φ110)	2	
13	24101-060144	BALL BEARING (#6014)	1	
14	TA00033451C	DIFF. CASE	1	
15	TA00054318A	BOLT	6	
16	24101-060134	BALL BEARING (#6013)	2	
17	TC57120000A4	LINER, DIFFERENTIAL GEAR	2	
18	TC57090000A4	GEAR, DIFFERENTIAL 14	2	
19	TC57100000A4	DIFFERENCIAL PINION GEAR 10	2	
20	TC57130000A4	LINER, DIFFERENTIAL PINION	2	
21	TC57110000B4	SHAFT, PINION	1	
22	22351-040040	PIN, SPRING (4-04)	1	
23	22312-080140	PIN, DOWEL (8-14)	2	
24	TA00033482A	SHIM 0.5T	1	
25	TA00033483A	SHIM 0.3T	1	
26	TA00033484A	SHIM 0.2T	1	

FIG C019-1 4520R(2014~)	Gear_Case_Front_Axle	Year/Month 2020/02

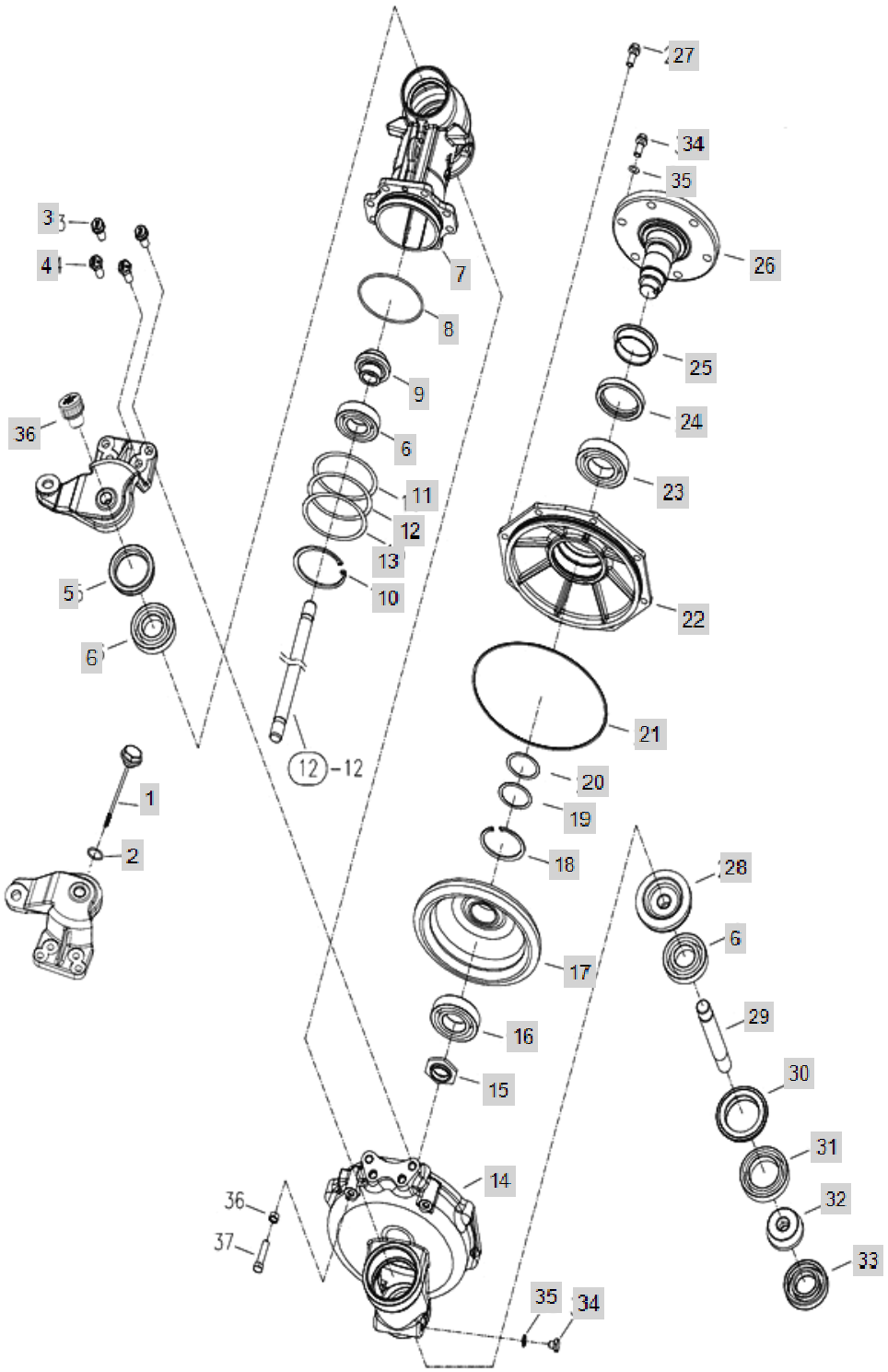

FIG C019-1 4520R(2014~)	Gear_Case_Front_Axle	Year/Month 2020/02

KeyNo.	Part Number	Part Name	Quantity	Other
1	TA00033805A	OIL GUAGE	1	
2	24311-000220	O-RING, DYNAMIC (Φ22)	2	
3	TA00033468A	BOLT W/ WASHER	4	
4	TA00033475A	RIMER BOLT	4	
5	FE78010000A	SEAL,OIL -> FE78010000B	2	
6	24101-062074	BALL BEARING (#6207)	6	
7	TA00033457A	CASE, FRONT GEAR	2	
8	24321-001050	O-RING	2	
9	TA00033461A	PINION, FRONT 1ST SHAFT	2	
10	22252-000720	RING, CIRCLIP (Φ 72)	2	
11	TA00033489A	SHIM 0.2T	2	
12	TA00033488A	SHIM 0.3T	2	
13	TA00033487A	SHIM 0.5T	2	
14	TA00033458A	GEAR BOX, FRONT	2	
15	TA00033481A	LOCK NUT	2	
16	24101-062084	Bearing, Ball (#6208)	2	
17	TA00033474A	GEAR, BEVEL 49T	2	
18	22252-000850	RING, CIRCLIP (Φ 85)	2	
19	TA00033486A	SHIM 0.2T	1	
20	TA00033485A	SHIM 0.5T	1	
21	TA00033939A	O RING	2	
22	TA00033459A	BEARING CASE, FRONT	1	
23	24101-062094	BALL BEARING (#6209)	2	
24	TC60430000A4	OIL SEAL	2	
25	TC61080000A3	SL SLEEVE	2	
26	TA00033460A	SPINDLE, FRONT	2	
27	TA00033469A	BOLT W/ WASHER	16	
28	TA00033463A	FRONT 2ND AXLE LH	2	
29	TA00033464A	FRONT 2ND SHAFT	2	
30	TC60110000A3	SEAL	2	
31	24101-060104	Bearing, Ball (#6010)	2	
32	TA00033473A	GEAR, BEVEL 11T	2	
33	TC60340000A4	BEARING(TM207C3)	2	
34	TD23120000A4	BOLT	12	
35	TB29430000A4	WASHER	12	
36	TC60790000B3	CAP(M20),OIL	1	

FIG C019-2 4520R(2014~)	GEAR CASE, FRONT AXLE(2014.12)	Year/Month 2020/02

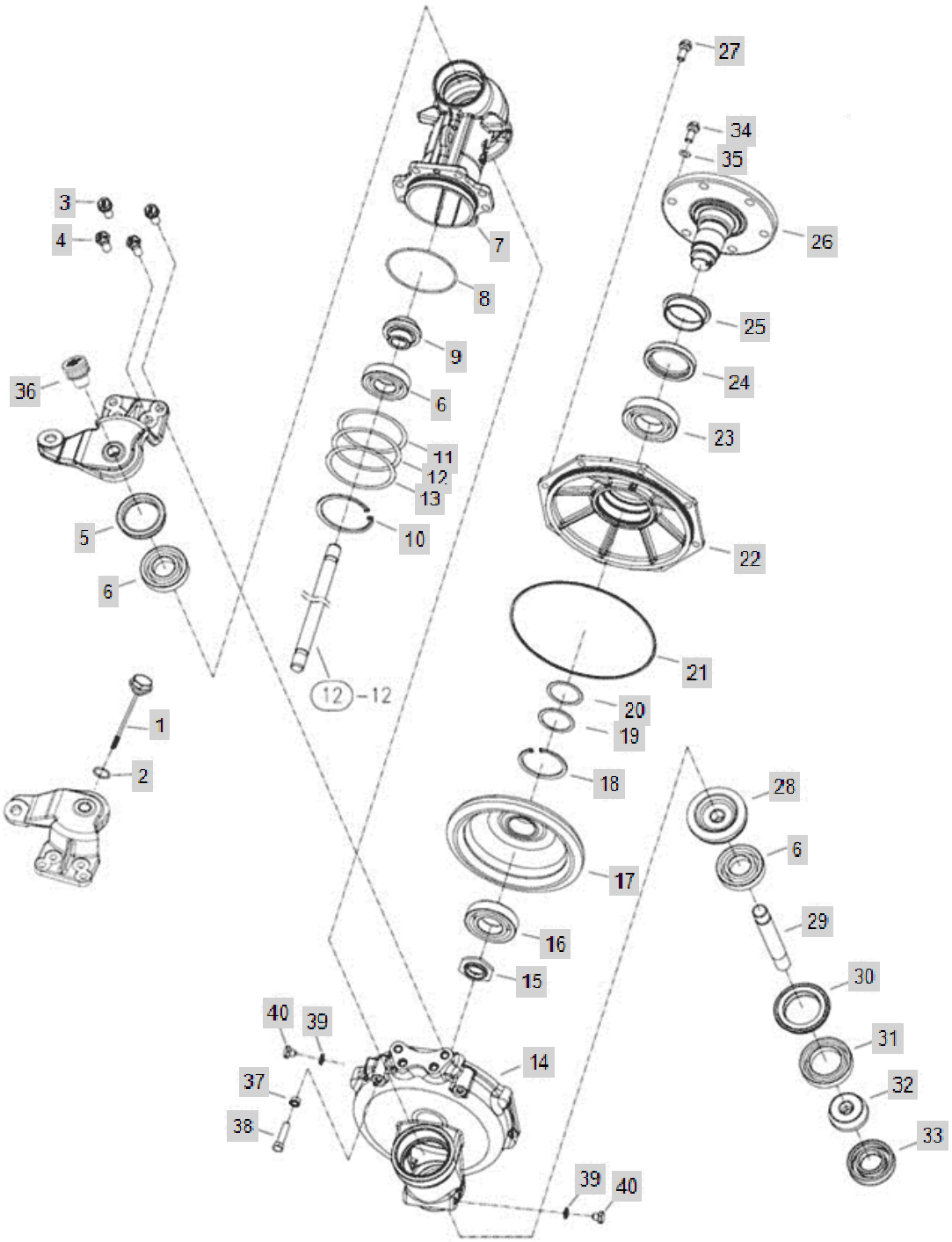

FIG C019-2 4520R(2014~)	GEAR CASE, FRONT AXLE(2014.12)	Year/Month 2020/02

KeyNo.	Part Number	Part Name	Quantity	Other
1	TA00033805A	OIL GUAGE	1	
2	24311-000220	O-RING, DYNAMIC (Φ22)	2	
3	TA00033468A	BOLT W/ WASHER	4	
4	TA00033475A	RIMER BOLT	4	
5	FE78010000A	SEAL,OIL -> FE78010000B	2	
6	24101-062074	BALL BEARING (#6207)	6	
7	TA00033457A	CASE, FRONT GEAR	2	
8	24321-001050	O-RING	2	
9	TA00033461A	PINION, FRONT 1ST SHAFT	2	
10	22252-000720	RING, CIRCLIP (Φ 72)	2	
11	TA00033489A	SHIM 0.2T	2	
12	TA00033488A	SHIM 0.3T	2	
13	TA00033487A	SHIM 0.5T	2	
14	TA00033458A	GEAR BOX, FRONT	2	
15	TA00033481A	LOCK NUT	2	
16	24101-062084	Bearing, Ball (#6208)	2	
17	TA00033474A	GEAR, BEVEL 49T	2	
18	22252-000850	RING, CIRCLIP (Φ 85)	2	
19	TA00033486A	SHIM 0.2T	1	
20	TA00033485A	SHIM 0.5T	1	
21	TA00033939A	O RING	2	
22	TA00033459A	BEARING CASE, FRONT	1	
23	24101-062094	BALL BEARING (#6209)	2	
24	TC60430000A	SEAL , OIL	2	
25	TC61080000A3	SL SLEEVE	2	
26	TA00033460A	SPINDLE, FRONT	2	
27	TA00033469A	BOLT W/ WASHER	16	
28	TA00033463A	FRONT 2ND AXLE LH	2	
29	TA00033464A	FRONT 2ND SHAFT	2	
30	TC60110000A3	SEAL	2	
31	24101-060104	Bearing, Ball (#6010)	2	
32	TA00033473A	GEAR, BEVEL 11T	2	
33	TC60340000A4	BEARING(TM207C3)	2	
34	TD23120000A4	BOLT	12	
35	TB29430000A4	WASHER	12	
36	TC60790000B	CAP ASS'Y,OIL	1	
37	26112-100452	BOLT	2	
38	26716-100001	NUT	2	
39	22190-100000	WASHER	4	
40	23887-100002	SCREW,HEXAGONHEADCAP	4	

FIG C019-3 4520R(2014~)	GEAR CASE, FRONT AXLE(2015.12)	Year/Month 2020/02

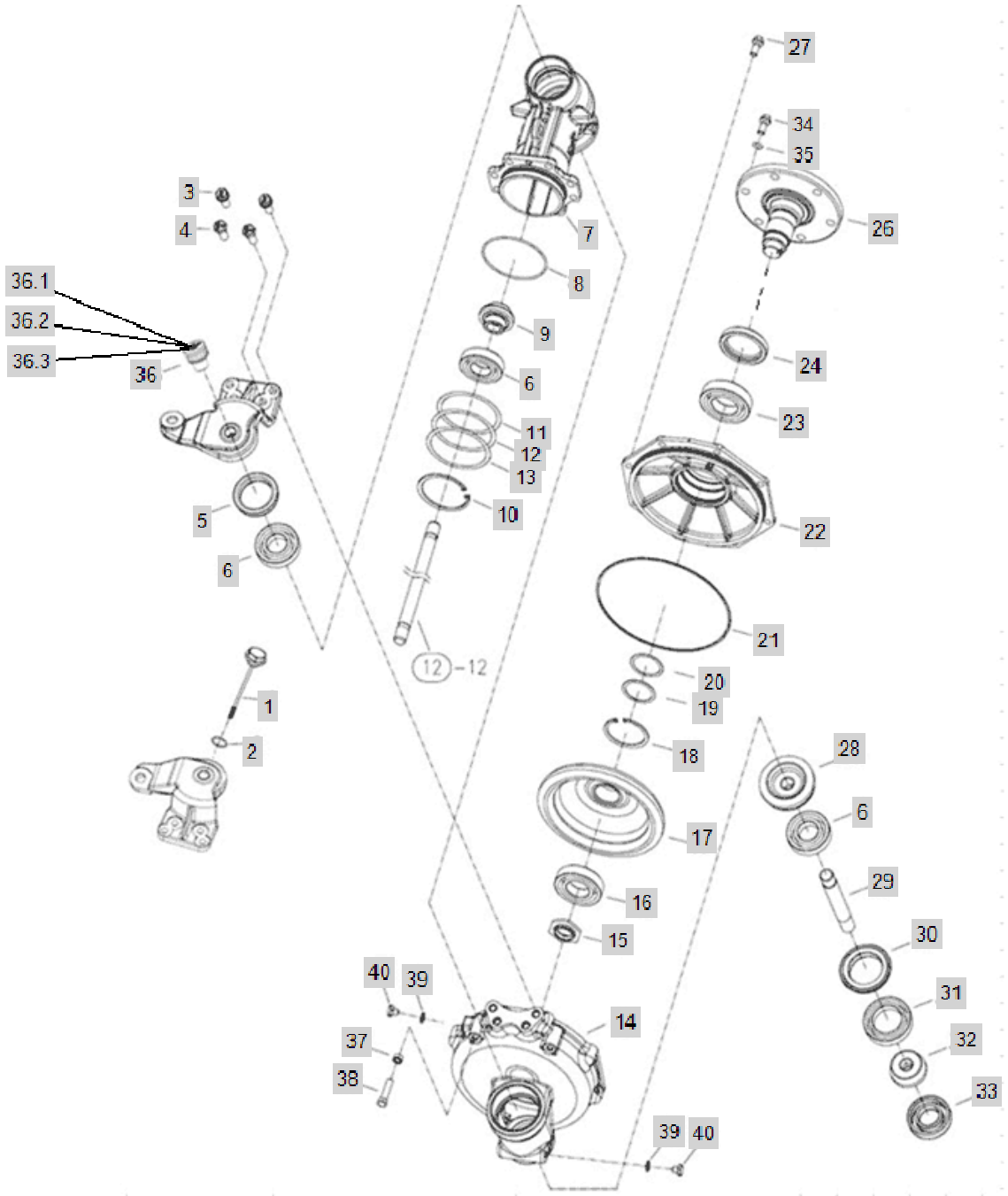

FIG C019-3 4520R(2014~)	GEAR CASE, FRONT AXLE(2015.12)	Year/Month 2020/02

KeyNo.	Part Number	Part Name	Quantity	Other
1	TA00033805A	OIL GUAGE	1	
2	24311-000220	O-RING, DYNAMIC (Φ22)	2	
3	TA00033468A	BOLT W/ WASHER	4	
4	TA00033475A	RIMER BOLT	4	
5	FE78010000A	SEAL,OIL -> FE78010000B	2	
6	24101-062074	BALL BEARING (#6207)	6	
7	TA00033457A	CASE, FRONT GEAR	2	
8	24321-001050	O-RING	2	
9	TA00033461A	PINION, FRONT 1ST SHAFT	2	
10	22252-000720	RING, CIRCLIP (Φ 72)	2	
11	TA00033489A	SHIM 0.2T	2	
12	TA00033488A	SHIM 0.3T	2	
13	TA00033487A	SHIM 0.5T	2	
14	TA00033458A	GEAR BOX, FRONT	2	
15	TA00033481A	LOCK NUT	2	
16	24101-062084	Bearing, Ball (#6208)	2	
17	TA00033474A	GEAR, BEVEL 49T	2	
18	22252-000850	RING, CIRCLIP (Φ 85)	2	
19	TA00033486A	SHIM 0.2T	1	
20	TA00033485A	SHIM 0.5T	1	
21	TA00033939A	O RING	2	
22	TA00033459A	BEARING CASE, FRONT	1	
23	24101-062094	BALL BEARING (#6209)	2	
24	TA00041359A	OILSEAL	2	
26	TA00033460A	SPINDLE, FRONT	2	
27	TA00033469A	BOLT W/ WASHER	16	
28	TA00033463A	FRONT 2ND AXLE LH	2	
29	TA00033464A	FRONT 2ND SHAFT	2	
30	TC60110000A3	SEAL	2	
31	24101-060104	Bearing, Ball (#6010)	2	
32	TA00033473A	GEAR, BEVEL 11T	2	
33	TC60340000A4	BEARING(TM207C3)	2	
34	TD23120000A4	BOLT	12	
35	TB29430000A4	WASHER	12	
36	TC60790000B	CAP ASS'Y,OIL	1	
36.1	TA00049842A	AIR BREATHER	1	
36.2	TA00049843A	ADAPTHER	1	
36.3	24311-000220	O-RING, DYNAMIC (Φ22)	1	
37	26112-100452	BOLT	2	
38	26716-100001	NUT	2	
39	22190-100000	WASHER	4	
40	23887-100002	SCREW,HEXAGONHEADCAP	4	

FIG C019-4 4520R(2014~)	GEAR CASE, FRONT AXLE	Year/Month 2020/02

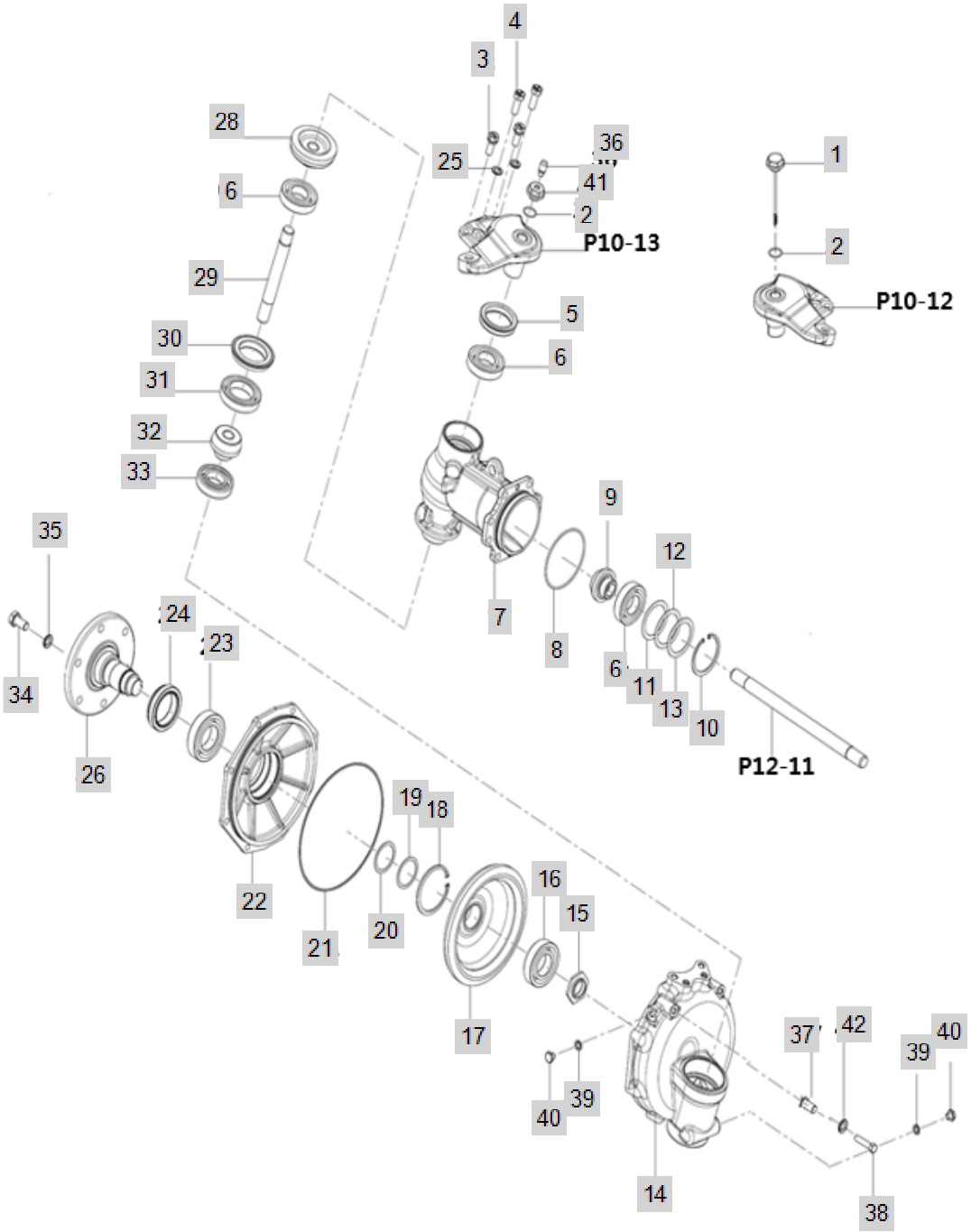

FIG C019-4 4520R(2014~)	GEAR CASE, FRONT AXLE	Year/Month 2020/02

KeyNo.	Part Number	Part Name	Quantity	Other
1	TA00033805A	OIL GUAGE	1	
2	24311-000220	O-RING, DYNAMIC (Φ22)	2	
3	TA00033468B	BOLT W/ WASHER	4	
4	TA00033475A	RIMER BOLT	4	
5	FE78010000B	OIL SEAL (55X72X13.5)	2	
6	24101-062074	BALL BEARING (#6207)	6	
7	TA00048728A	CASE, FRONT GEAR	2	
8	24321-001050	O-RING	2	
9	TA00033461A	PINION, FRONT 1ST SHAFT	2	
10	22252-000720	RING, CIRCLIP (Φ 72)	2	
11	TA00033489A	SHIM 0.2T	2	
12	TA00033488A	SHIM 0.3T	2	
13	TA00033487A	SHIM 0.5T	2	
14	TA00033458B	GEAR BOX, FRONT	2	
15	TA00033481A	LOCK NUT	2	
16	24101-062084	Bearing, Ball (#6208)	2	
17	TA00033474A	GEAR, BEVEL 49T	2	
18	22252-000850	RING, CIRCLIP (Φ 85)	2	
19	TA00033486A	SHIM 0.2T	1	
20	TA00033485A	SHIM 0.5T	1	
21	TA00033939A	O RING	2	
22	TA00033459B	BEARING CASE, FRONT	1	
23	24101-062094	BALL BEARING (#6209)	2	
24	TA00041359A	OILSEAL	2	
25	22217-120000	WASHER, SPRING (Φ 12)	2	
26	TA00033460A	SPINDLE, FRONT	2	
27	TA00033469A	BOLT W/ WASHER	16	
28	TA00033463A	FRONT 2ND AXLE LH	2	
29	TA00033464A	FRONT 2ND SHAFT	2	
30	TC60110000A3	SEAL	2	
31	24101-060104	Bearing, Ball (#6010)	2	
32	TA00033473A	GEAR, BEVEL 11T	2	
33	TC60340000A4	BEARING(TM207C3)	2	
34	TD23120000A4	BOLT	12	
35	22217-140000	WASHER, SPRING (Φ 14)	12	
36	TA00049842A	AIR BREATHER	1	
37	TA00058614A	STOPER	2	
37-1	26716-100001	NUT	2	
38	26112-100502		2	
38-1	26112-100452	BOLT	2	
39	22190-100000	WASHER	4	
40	23887-100002	SCREW,HEXAGONHEADCAP	4	
41	TA00049843A	ADAPTHER	1	
42	22217-100000	WASHER, SPRING (Φ 10)	2	

FIG C020A-1 4520R(2014~)	FRONT AXLE SPACER	Year/Month 2020/02

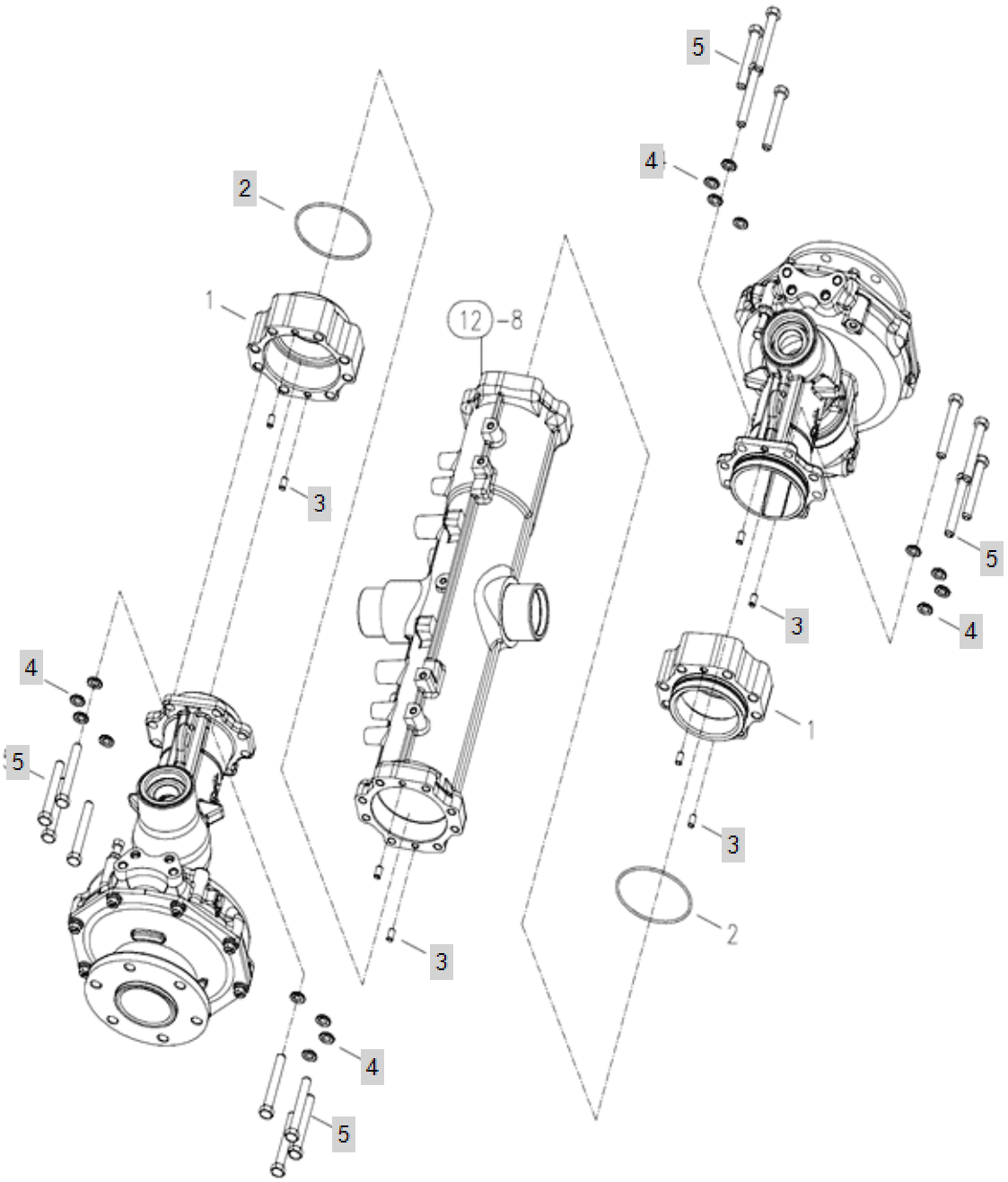

FIG C020A-1 4520R(2014~)	FRONT AXLE SPACER	Year/Month 2020/02

KeyNo.	Part Number	Part Name	Quantity	Other
2	24321-001050	O-RING	0	
3	22312-080140	PIN, DOWEL (8-14)	0	
4	22217-120000	WASHER, SPRING (Φ 12)	0	
5	TA00033470A	BOLT	0	

FIG C020B-1 4520R(2014~)	Spacer	Year/Month 2020/02

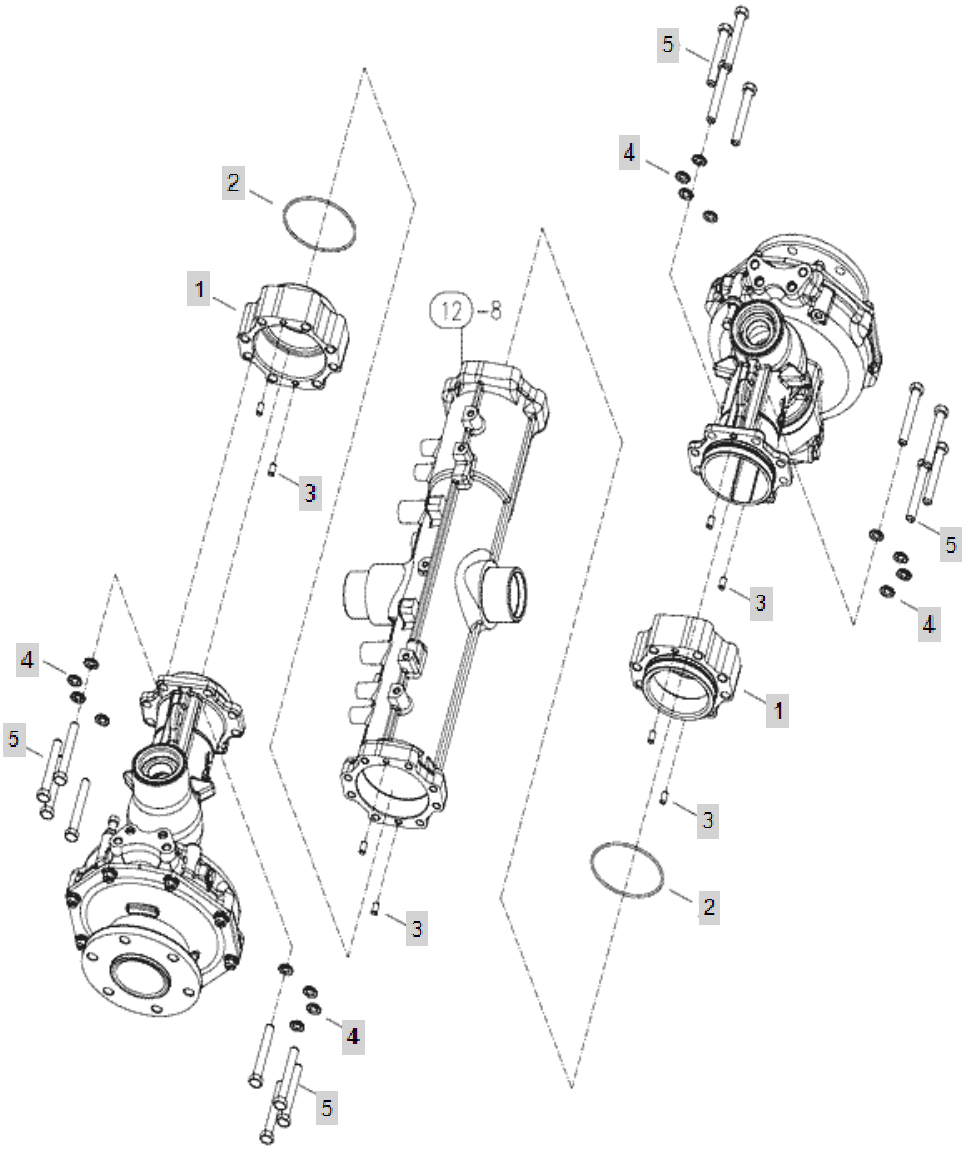

FIG C020B-1 4520R(2014~)	Spacer	Year/Month 2020/02

KeyNo.	Part Number	Part Name	Quantity	Other
1	TA00033807A	SPACER	2	
2	24321-001050	O-RING	2	
3	22312-080140	PIN, DOWEL (8-14)	8	
4	22217-120000	WASHER, SPRING (Φ 12)	16	
5	26116-120852	Bolt	16	

FIG C020B-1 4520R(2014~)	Spacer	Year/Month 2020/02

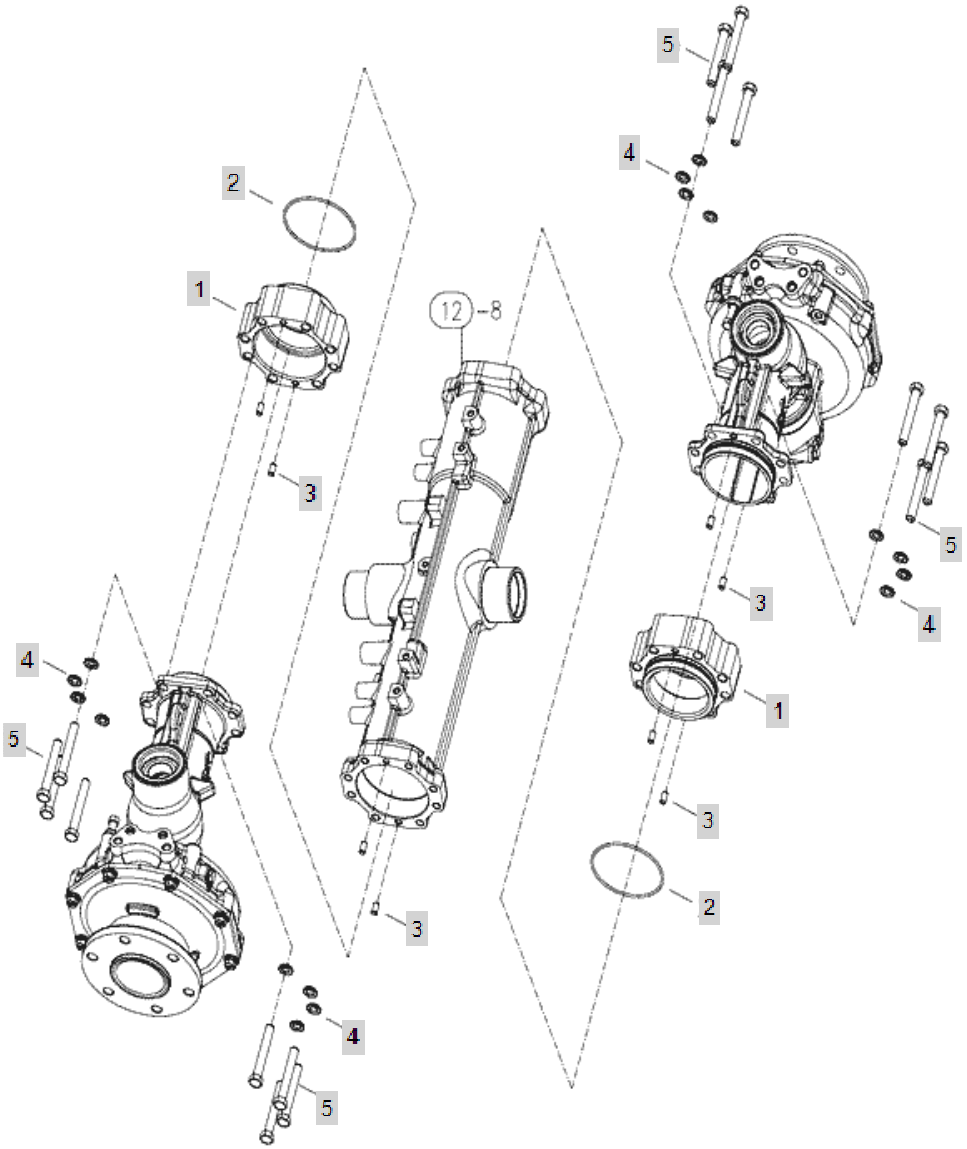

FIG C020B-1 4520R(2014~)	Spacer	Year/Month 2020/02

KeyNo.	Part Number	Part Name	Quantity	Other
1	TA00033807A	SPACER	2	
2	24321-001050	O-RING	2	
3	22312-080140	PIN, DOWEL (8-14)	8	
4	22217-120000	WASHER, SPRING (Φ 12)	16	
5	26116-120852	Bolt	16	

FIG C020T-2 4520R(2014~)	Spacer	Year/Month 2020/02

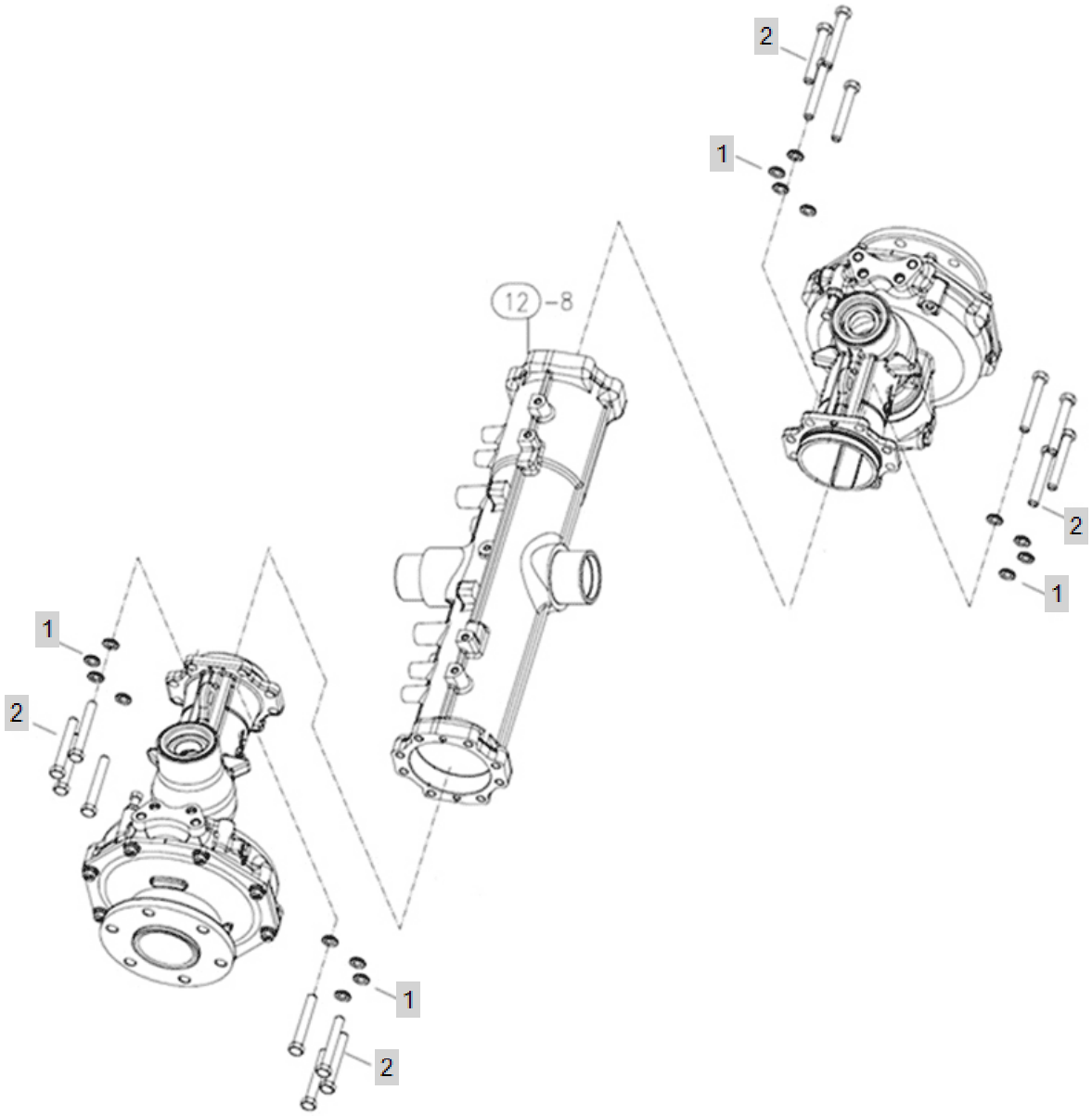

FIG C020T-2 4520R(2014~)	Spacer	Year/Month 2020/02

KeyNo.	Part Number	Part Name	Quantity	Other
1	22217-120000	WASHER, SPRING (Φ 12)	16	
2	TC60400000A4	BOLT	16	

FIG C023-1 4520R(2014~)	Cover_Shaft	Year/Month 2020/02

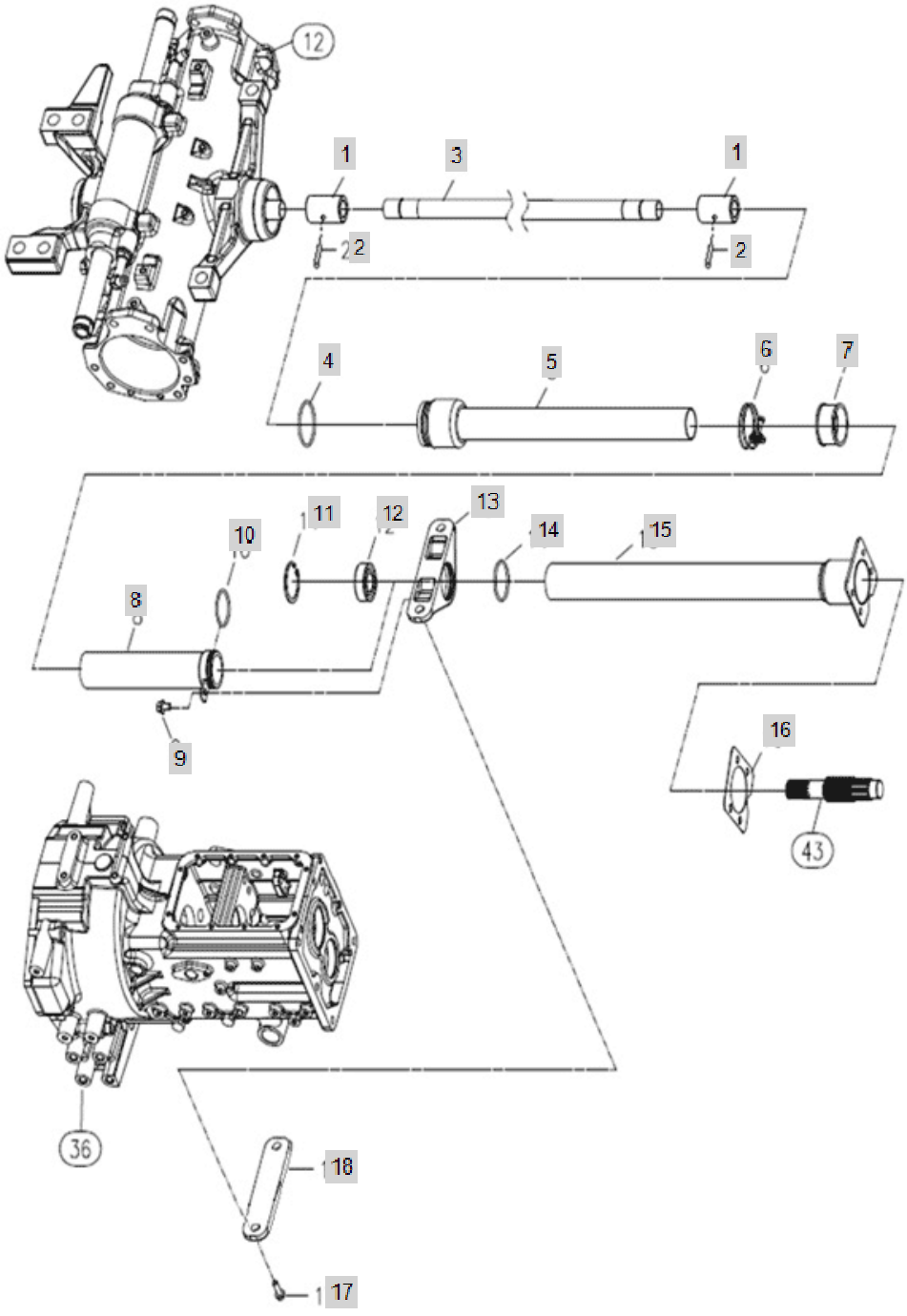

FIG C023-1 4520R(2014~)	Cover_Shaft	Year/Month 2020/02

KeyNo.	Part Number	Part Name	Quantity	Other
1	NT15080000B	COUPLING R	2	
2	22351-040036	SPRING PIN	2	
3	TA00015872B	SHAFT	1	
4	24321-000550	SEAL,O-RING	1	
5	TC62110100A3	COVER SHAFT (FRONT)	1	
6	23010-055000	HOSEBAND55	1	
7	TC62020000A4	BOOTS,SHAFT COVER	1	
8	TA00031873A	COVER SHAFT (FRONT) REAR	1	
9	26106-080122	Bolt, Hexa (8-12)	1	
10	24321-000450	O-RING, DYNAMIC (Φ45)	1	
11	22252-000520	RING, CIRCLIP (Φ 52)	1	
12	24104-062054	BALL BEARING (#6205UU)	1	
13	TA00031869A	BEARING HOLDER	1	
14	24321-000500	O-RING (D50)	1	
15	TA00031871A	COVER SHAFT (REAR)	1	
16	TN23070000A4	PACKINGCOVER	1	
17	26106-120252	HEX FLANGE BOLT	2	
18	TA00036217A	SPACER	1	DELETE

FIG C023-2 4520R(2014~)	Cover_Shaft	Year/Month 2020/02

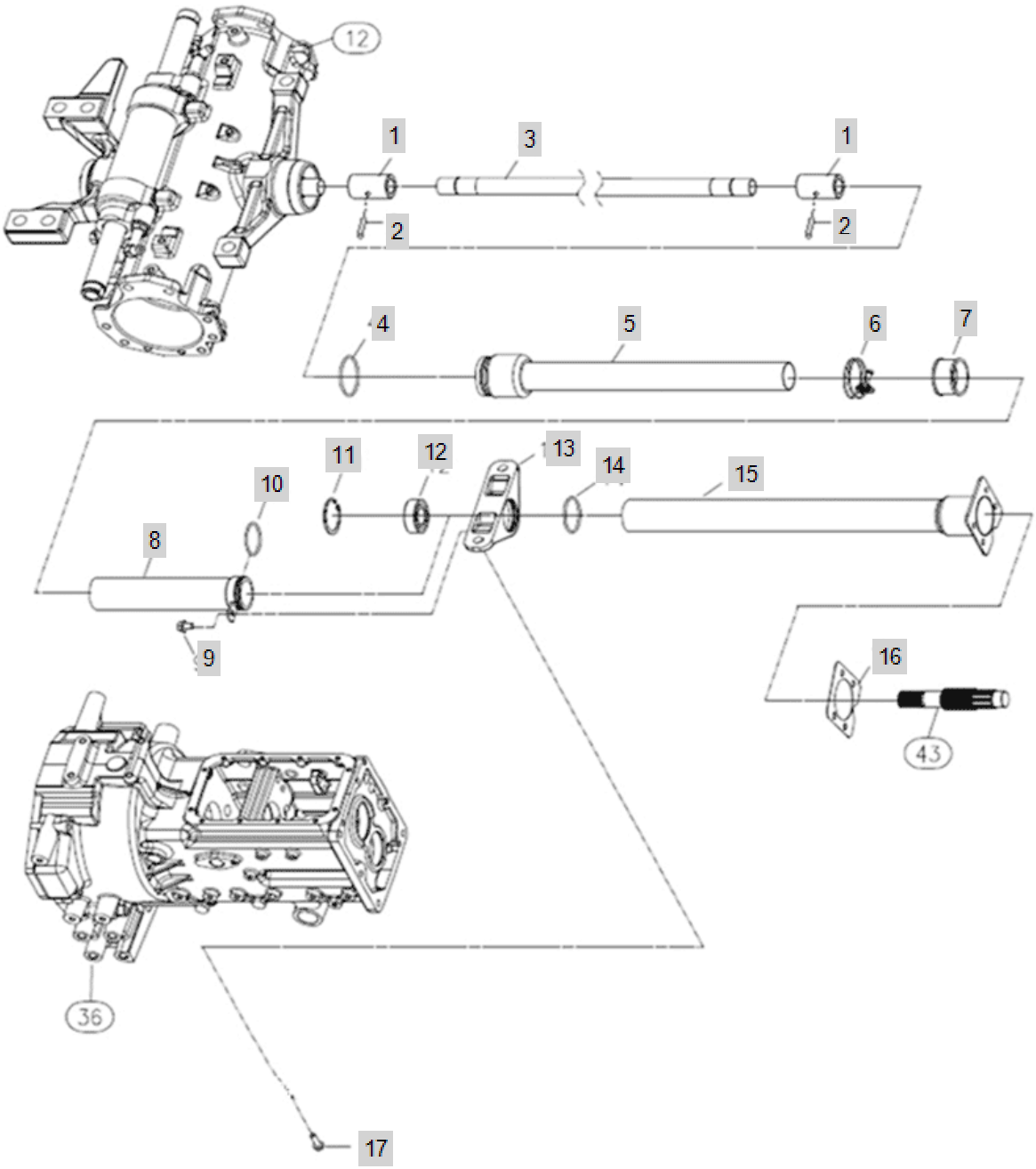

FIG C023-2 4520R(2014~)	Cover_Shaft	Year/Month 2020/02

KeyNo.	Part Number	Part Name	Quantity	Other
1	NT15080000B	COUPLING R	2	
2	22351-040036	SPRING PIN	2	
3	TA00015872B	SHAFT	1	
4	24321-000550	SEAL,O-RING	1	
5	TC62110100A3	COVER SHAFT (FRONT)	1	
6	23010-055000	HOSEBAND55	1	
7	TC62020000A4	BOOTS,SHAFT COVER	1	
8	TA00031873A	COVER SHAFT (FRONT) REAR	1	
9	26106-080122	Bolt, Hexa (8-12)	1	
10	24321-000450	O-RING, DYNAMIC (Φ45)	1	
11	22252-000520	RING, CIRCLIP (Φ 52)	1	
12	24104-062054	BALL BEARING (#6205UU)	1	
13	TA00031869A	BEARING HOLDER	1	
14	24321-000500	O-RING (D50)	1	
15	TA00031871A	COVER SHAFT (REAR)	1	
16	TN23070000A4	PACKINGCOVER	1	
17	26106-120252	HEX FLANGE BOLT	2	

FIG C032 4520R(2014~)	P.S.T_Cylinder	Year/Month 2020/02

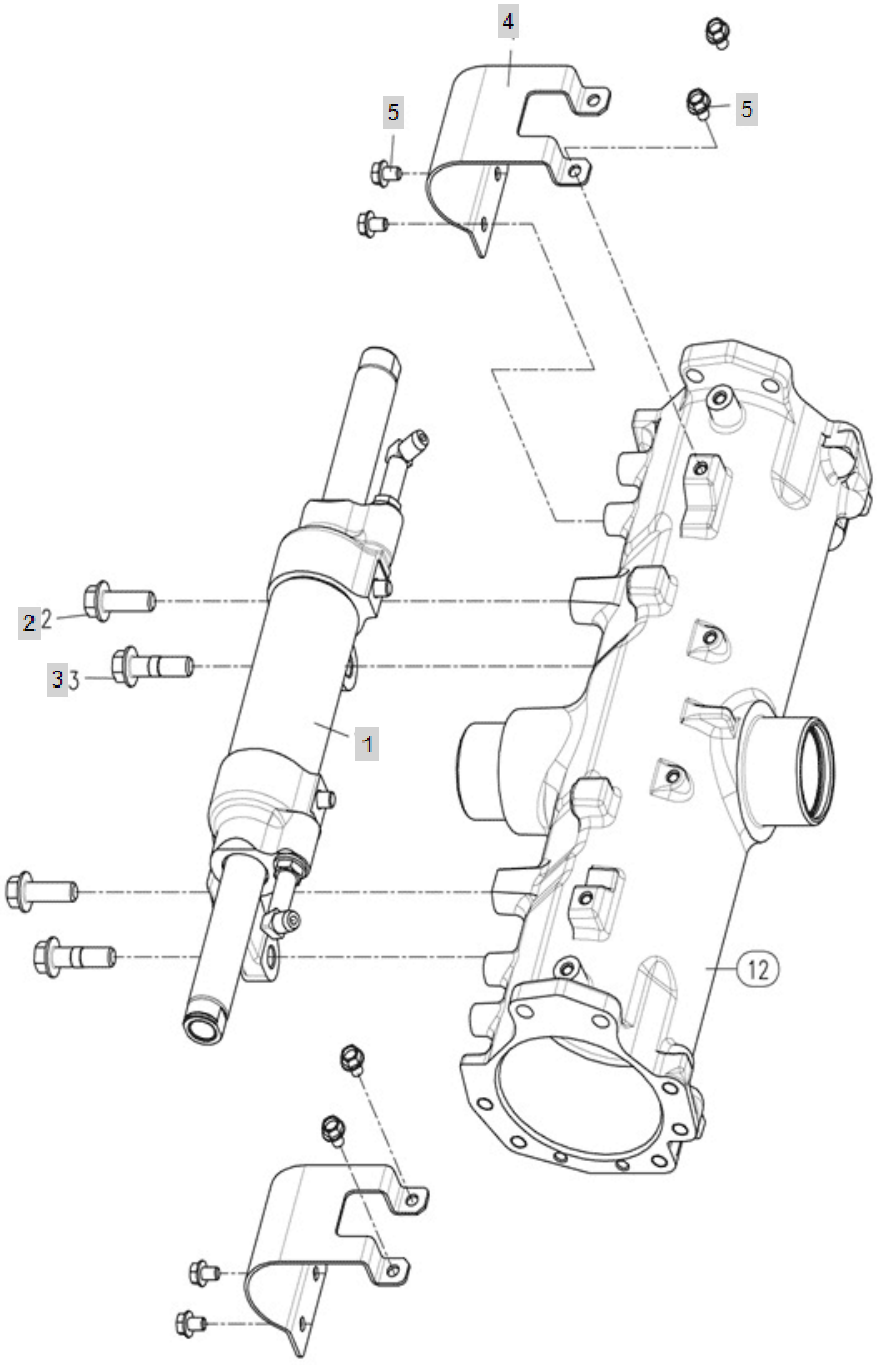

FIG C032 4520R(2014~)	P.S.T_Cylinder	Year/Month 2020/02

KeyNo.	Part Number	Part Name	Quantity	Other
1	TC66030000C2	STEERING CYLINDER ASSY	1	
2	TC66010000A4	SCREW FLANGE	2	
3	TC66020000A4	REAMER BOLT M12x46	2	
4	TA00000834A	PST CYLINDER COVER	2	
5	26106-080122	Bolt, Hexa (8-12)	8	

FIG C034 4520R(2014~)	P.S.T._Pipe	Year/Month 2020/02

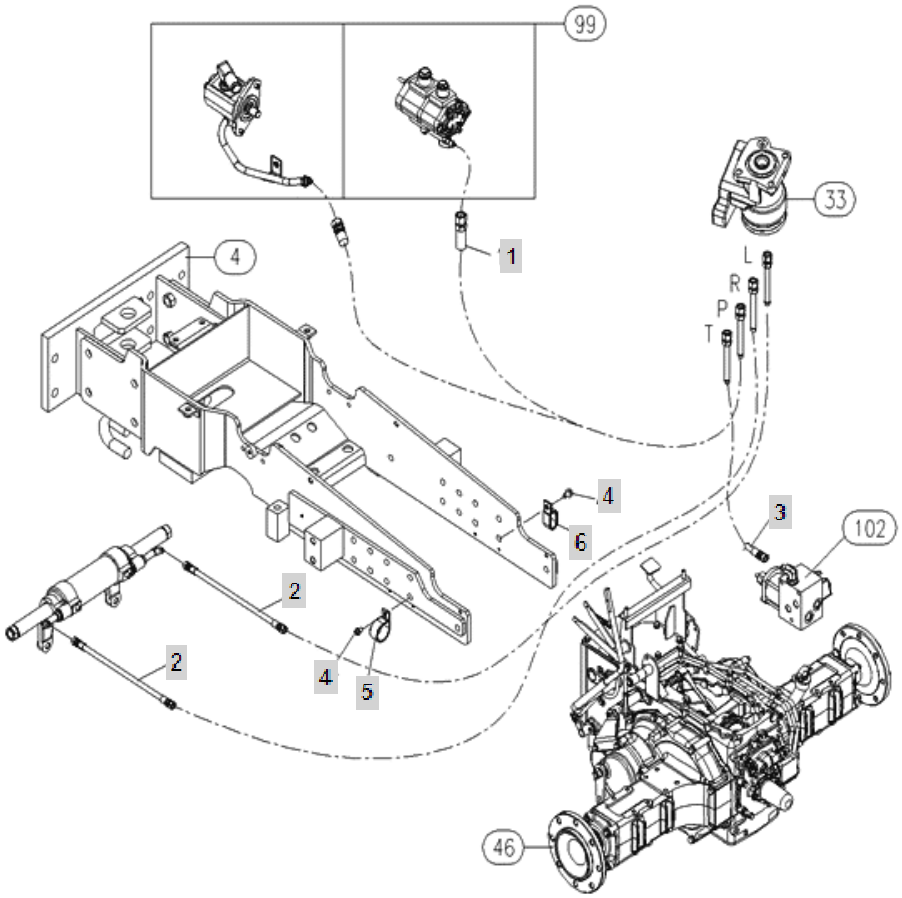

FIG C034 4520R(2014~)	P.S.T._Pipe	Year/Month 2020/02

KeyNo.	Part Number	Part Name	Quantity	Other
1	TA00015693A	HP HOSE (PUMP)	1	
2	TA00015708B	HOSE, POWER STEERING	2	
3	TA00015709A	HOSE, PST RETURN	1	
4	26106-060122	HEX BOLT (6-12)	2	
5	CE05310000A4	CLIP	1	
6	CA18080000A4	CLIPCDD-173219	1	

FIG C036D-1 4520R(2014~)	Clutch Housing	Year/Month 2020/02

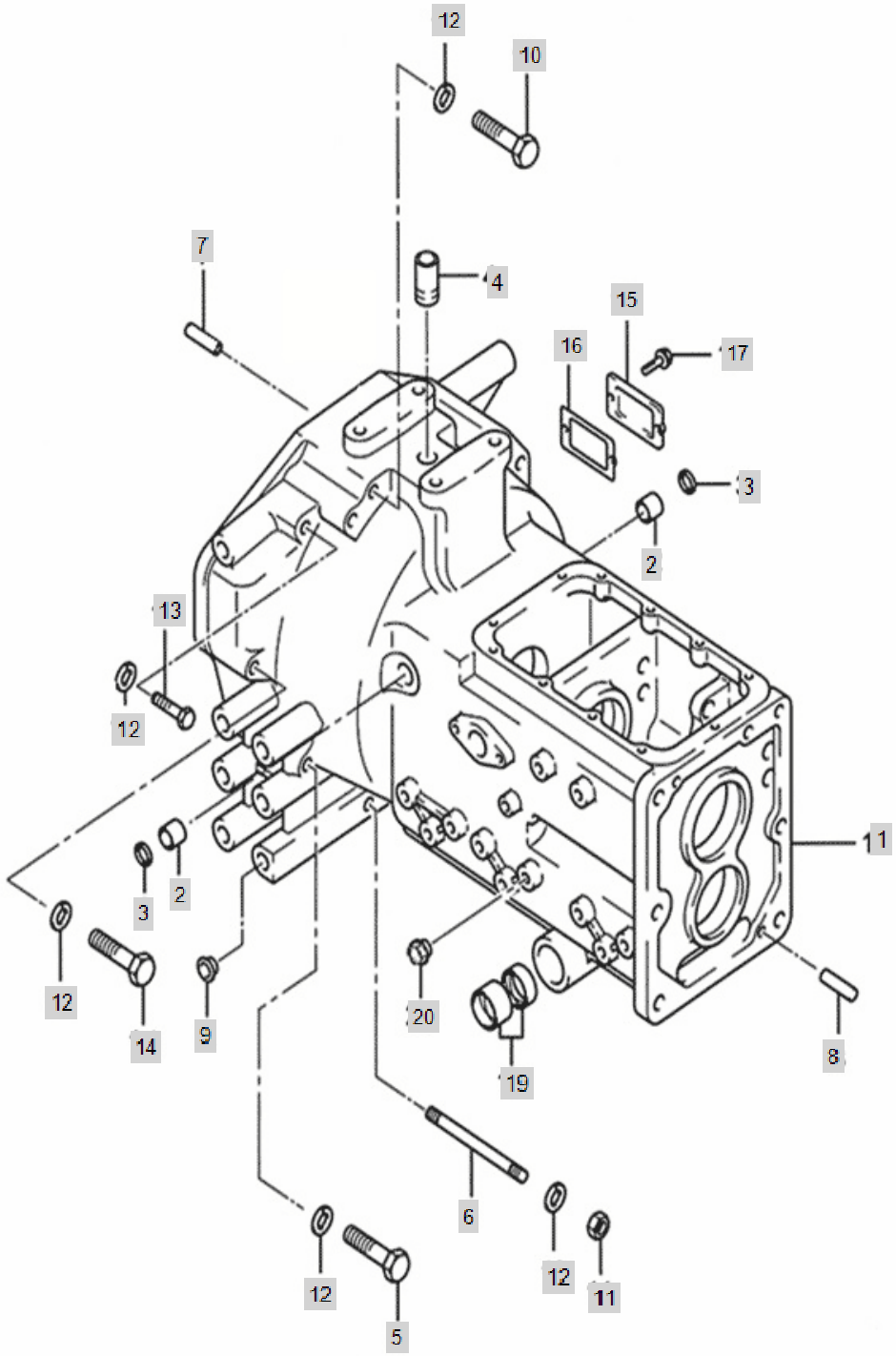

FIG C036D-1 4520R(2014~)	Clutch Housing	Year/Month 2020/02

KeyNo.	Part Number	Part Name	Quantity	Other
1	NT36010000F0	CLUTCH HOUSING	1	
2	TT36020000A4	BUSH20X26X22	2	
3	TT36030000A4	SEAL20X26X4	2	
4	NT36040000A4	PIPEAIR	1	
5	TZ3605H000A3	BOLT	4	
6	TZ3606Y000A4	STUD	2	
7	22312-080180	PIN, DOWEL (8-18)	2	
8	NT41430000A4	PARALLEL PIN	2	
9	TTD4300000A4	PLUG15	8	
10	TZ3605Y000A3	BOLT	2	
11	26716-120002	BOLT,CYLINDER HEAD(B)	3	
12	22217-120000	WASHER, SPRING (Φ 12)	10	
13	FB36380000A4	Hex Bolt With Washer	1	
14	TZ3622Y000A3	BOLT.M12*110	1	
15	TZ36250000A4	COVER,CLUTCHADJUST	1	
16	TZ36260000A4	PACKING	1	
17	26013-080202	Bolt, Hexa (8-20)	2	
19	TB26240000A4	BUSH	4	
20	NT36700000A4	PLUG	1	

FIG C036D-2 4520R(2014~)	CLUTCH HOUSING	Year/Month 2020/02

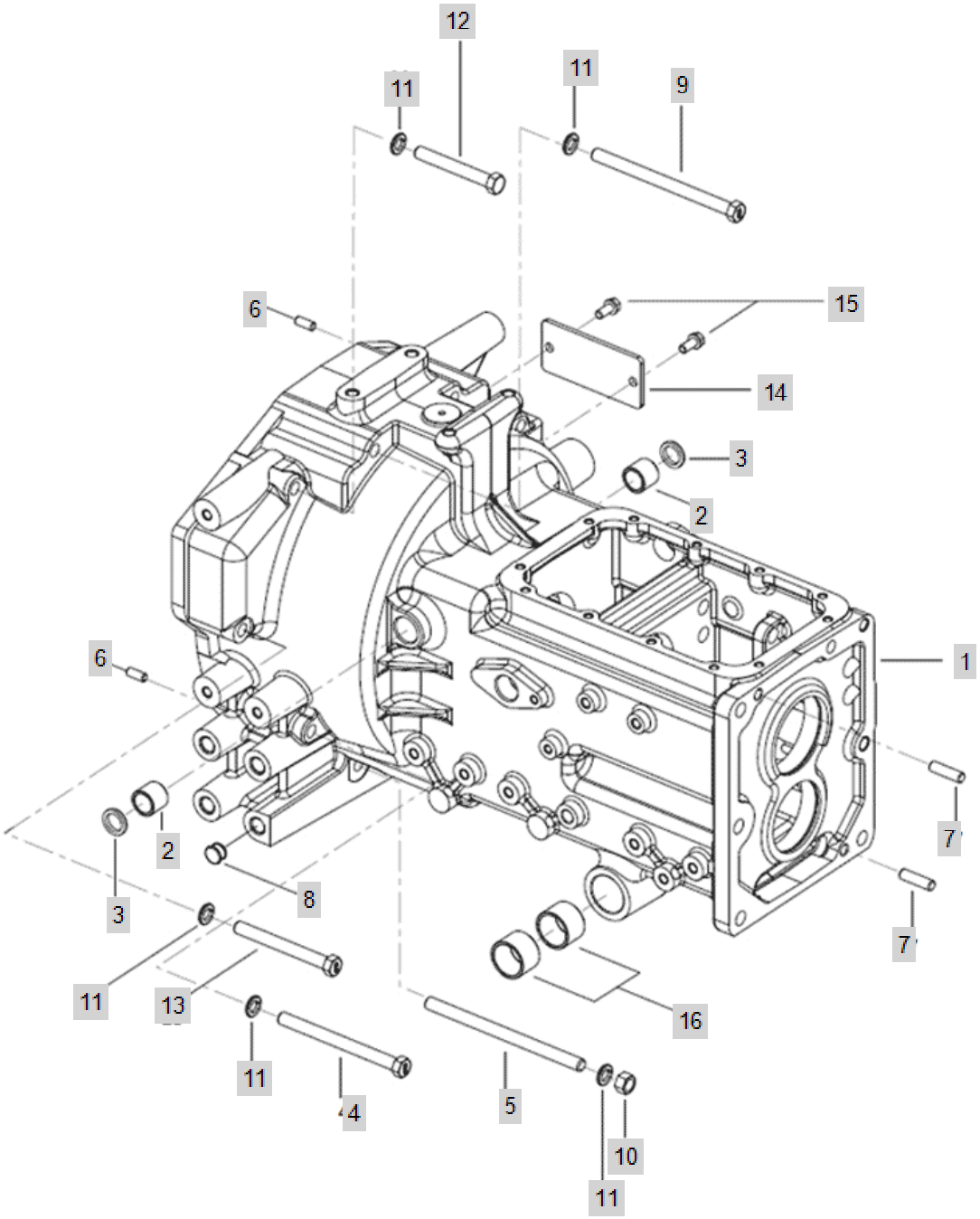

FIG C036D-2 4520R(2014~)	CLUTCH HOUSING	Year/Month 2020/02

KeyNo.	Part Number	Part Name	Quantity	Other
1	NT360100001I0	CLUTCH HOUSING	1	
2	TT36020000A4	BUSH20X26X22	2	
3	TT36030000A4	SEAL20X26X4	2	
4	TZ3605Y000A3	BOLT	4	
5	NT36060000B4	STUD BOLT M12X180	2	
6	22312-080180	PIN, DOWEL (8-18)	2	
7	NT41430000A4	PARALLEL PIN	2	
8	TTD4300000A4	PLUG15	8	
9	NT36150000C4	HEX BOLT M12X165	2	
10	26716-120002	BOLT,CYLINDER HEAD(B)	3	
11	22217-120000	WASHER, SPRING (Φ 12)	10	
12	FB36380000A4	Hex Bolt With Washer	1	
13	TZ3605H000A3	BOLT	1	
14	TZ36250000A4	COVER,CLUTCHADJUST	1	
15	26013-080202	Bolt, Hexa (8-20)	2	
16	TB26240000A4	BUSH	4	

FIG C038-1 4520R(2014~)	ClutchAss'y	Year/Month 2020/02

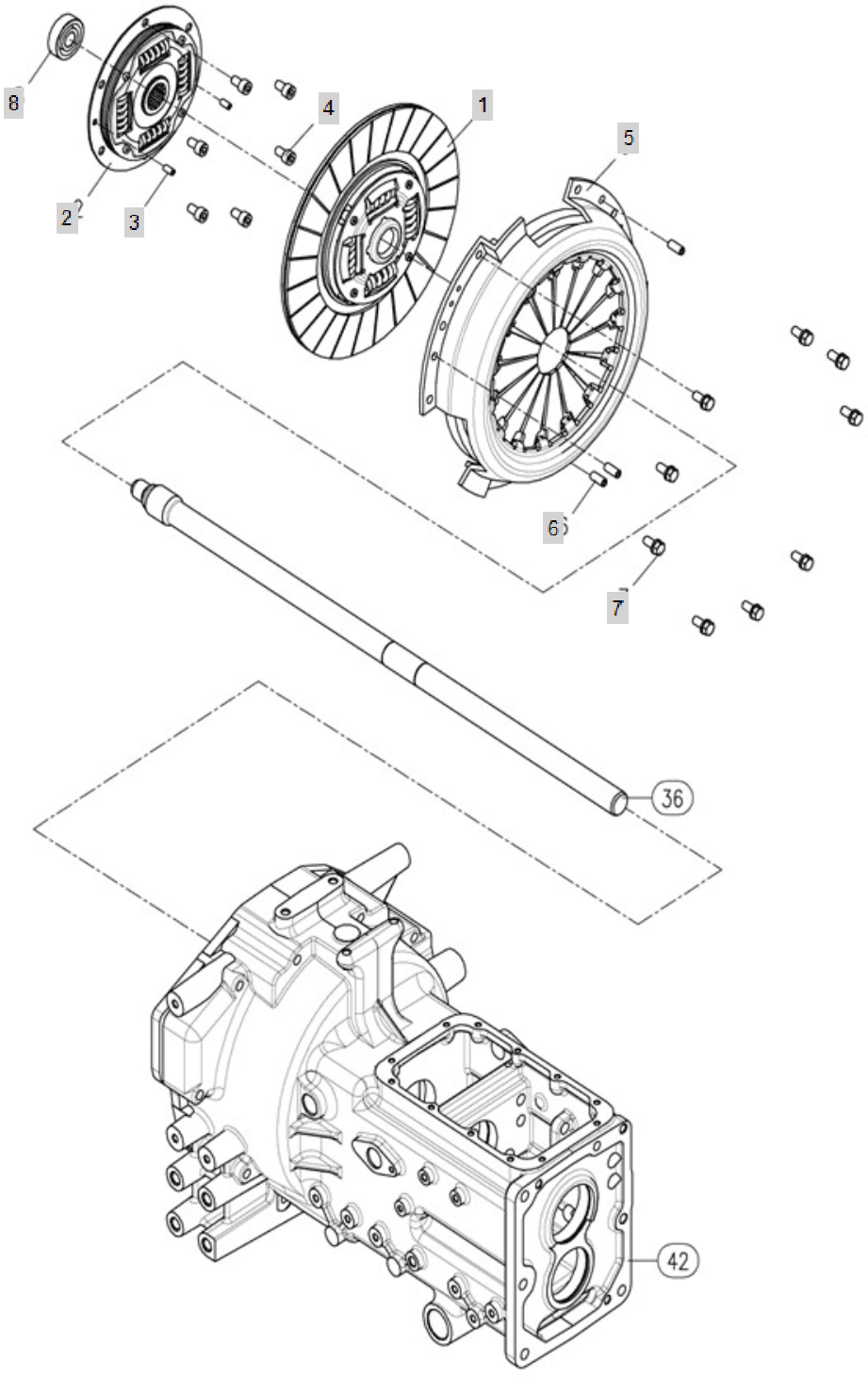

FIG C038-1 4520R(2014~)	ClutchAss'y	Year/Month 2020/02

KeyNo.	Part Number	Part Name	Quantity	Other
1	NT38080000A2	CLUTCH DISC ASSY	1	
2	NT38100000A3	PTO DAMPER	1	
3	22351-060012	PIN, SPRING (6-12)	2	
4	26450-080142	BOLT	6	
5	TU38040000A1	CLUTCH COVER ASSY	1	
6	22351-080018	PIN, SPRING (8-18)	3	
7	26013-080182	SCREW,CAPTIVEWASHERCAP	9	
8	24104-063024	BALL BEARING (#6302UU)	1	

FIG C038-2 4520R(2014~)	ClutchAss'y	Year/Month 2020/02

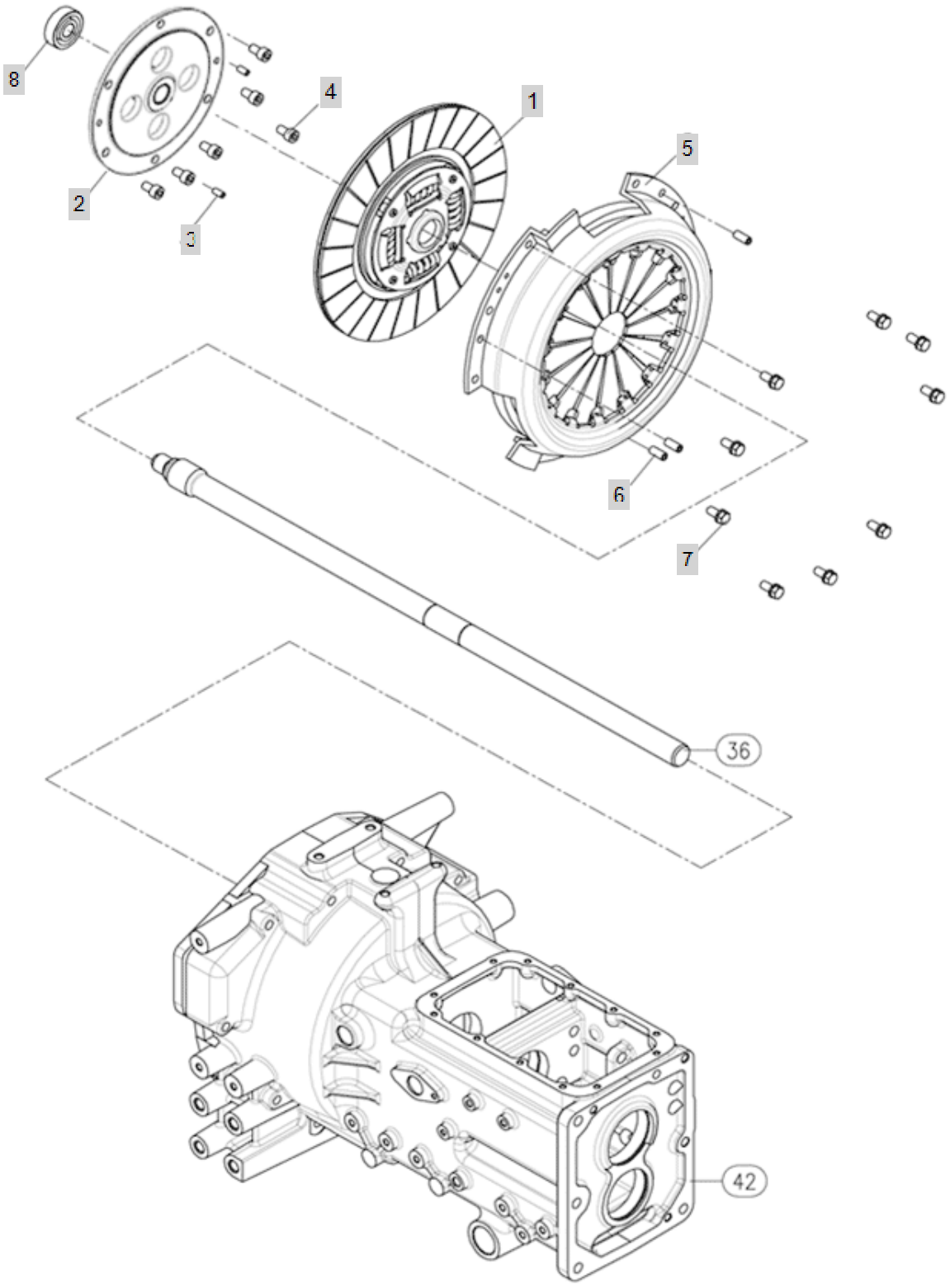

FIG C038-2 4520R(2014~)	ClutchAss'y	Year/Month 2020/02

KeyNo.	Part Number	Part Name	Quantity	Other
1	NT38080000A2	CLUTCH DISC ASSY	1	
2	TA00056311A	PTO SLEEVE	1	
3	22351-060012	PIN, SPRING (6-12)	2	
4	26450-080142	BOLT	6	
5	TU38040000A1	CLUTCH COVER ASSY	1	
6	22351-080018	PIN, SPRING (8-18)	3	
7	26013-080182	SCREW,CAPTIVEWASHERCAP	9	
8	24104-063024	BALL BEARING (#6302UU)	1	

FIG C040-1 4520R(2014~)	ClutchRelease	Year/Month 2020/02

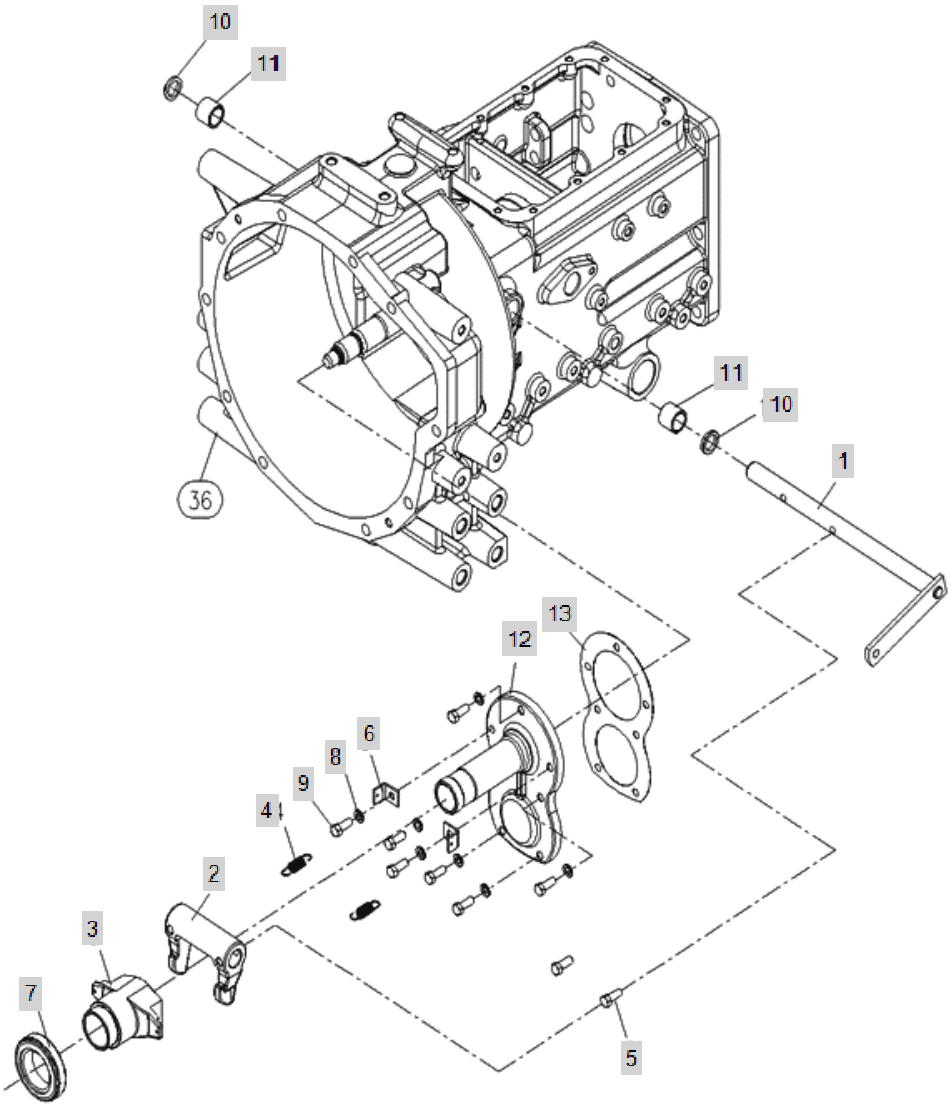

FIG C040-1 4520R(2014~)	ClutchRelease	Year/Month 2020/02

KeyNo.	Part Number	Part Name	Quantity	Other
1	NT40010000A3	RELEASESHAFT(MAINCLUTCH)	1	
2	TZ40040000G	YOKE,CLUTCH SHIFT	1	
3	NT40300000A3	BEARING SLEEVE	1	
4	TT40050000A4	SPRINGRETURN	2	
5	TC72040000A4	HEX BOLT 8X40	2	
6	TN40090000A4	BRACKETSPRING	2	
7	TT40030000A4	BEARING TK45	1	
8	22217-080000	WASHER, SPRING (Φ 08)	7	
9	26116-080222	BOLT7T(8X22)	7	
10	TT36030000A4	SEAL20X26X4	2	
11	TT36020000A4	BUSH20X26X22	2	
12	NT41580000A2	oil seal case	1	
13	TZ41200000A3	PACKING	1	

FIG C040-2 4520R(2014~)	ClutchRelease	Year/Month 2020/02

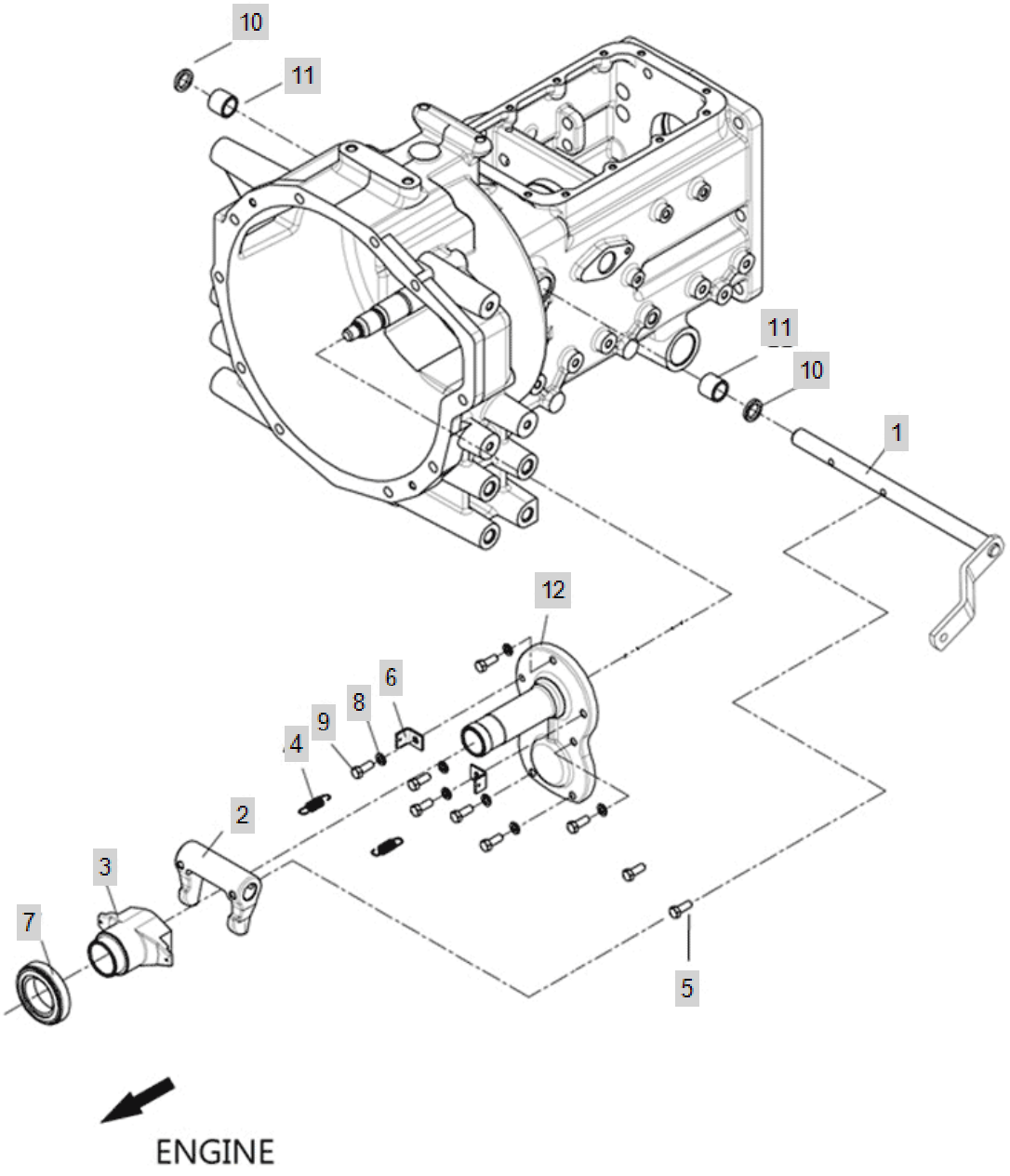

FIG C040-2 4520R(2014~)	ClutchRelease	Year/Month 2020/02

KeyNo.	Part Number	Part Name	Quantity	Other
1	TA00032128A	RELEASE SHAFT(MAIN CLUTCH)	1	
2	TZ40040000G	YOKE,CLUTCH SHIFT	1	
3	NT40300000A	SLEEVE BEARING	1	
4	TT40050000B4	SPRINGRETURN	2	
5	TC72040000A4	HEX BOLT 8X40	2	
6	TN40090000A4	BRACKETSPRING	2	
7	TT40030000A	BEARING TK45	1	
8	22217-080000	WASHER, SPRING (Φ 08)	7	
9	26116-080222	BOLT7T(8X22)	7	
10	TT36030000A4	SEAL20X26X4	2	
11	TT36020000A4	BUSH20X26X22	2	
12	NT41580000B2	OIL SEAL CASE	1	

FIG C041-1 4520R(2014~)	TransmissionCaseShift	Year/Month 2020/02

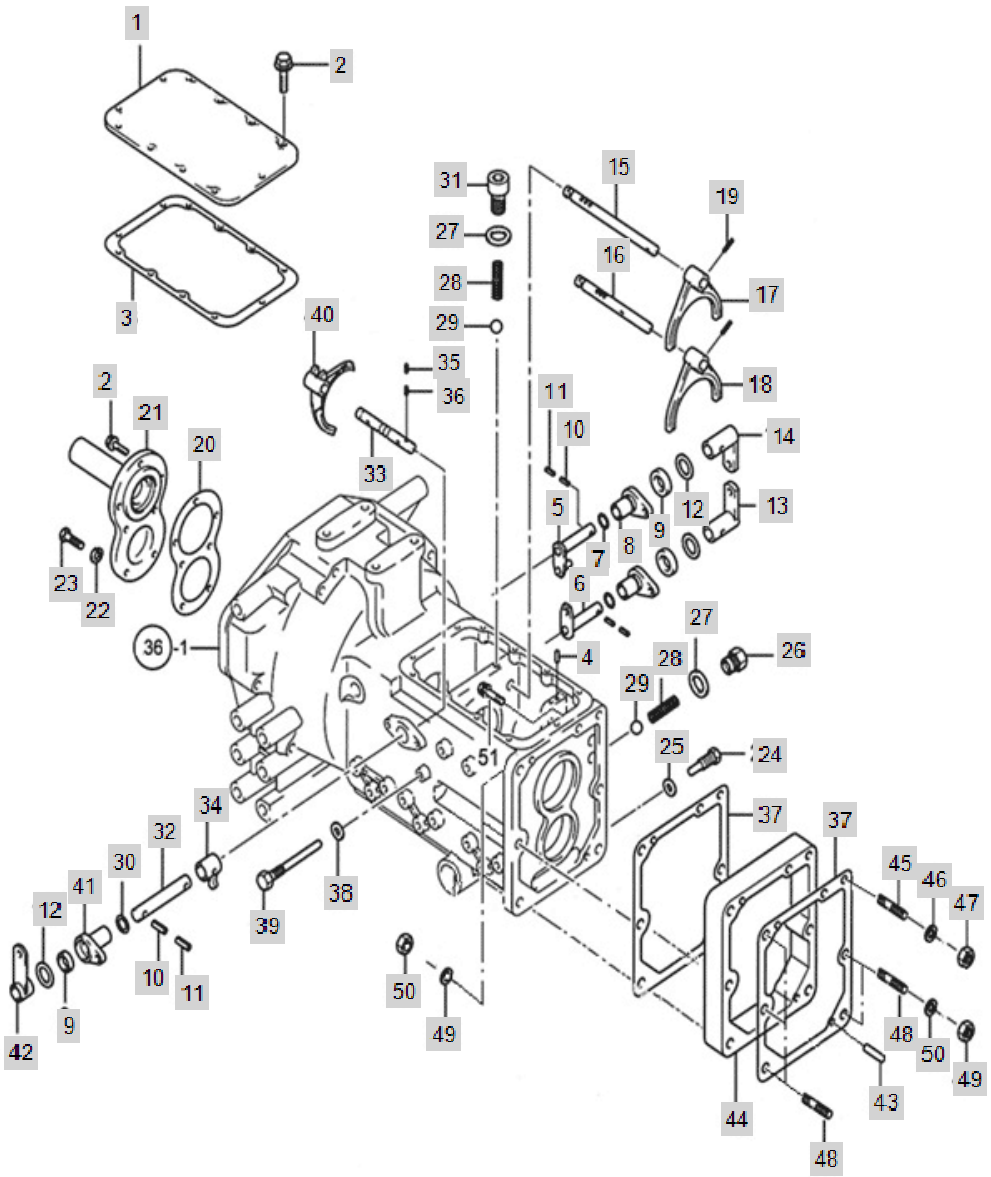

FIG C041-1 4520R(2014~)	TransmissionCaseShift	Year/Month 2020/02

KeyNo.	Part Number	Part Name	Quantity	Other
1	NT41010000C3	UPPERCOVER,T/M	1	
2	26013-080252	Bolt, Hexa (8-25)	19	
3	NT41040000B3	GASKET	1	
4	TN41070000A4	PIN	1	
5	NT41080000A4	LEVER3-4	1	
6	NT41600000A4	LEVER[1ST-2ND],MAINSHIFT	1	
7	24311-000210	O-RING, DYNAMIC (Φ21)	3	
8	TN41100000A4	HOLDERMAINSHIFT	2	
9	24421-173007	Seal, Oil (#17-30-07)	3	
10	22351-080028	PIN, SPRING (8-28)	2	
11	22351-050028	PIN, SPRING (5-02)	2	
12	TT65120000A4	COLLARB	3	
13	NT41130000B4	ARM(3-4), MAIN SHIFT	1	
14	NT41140000A4	ARM(1-2),MAINSHIFT	1	
15	NT41150000A3	FORKSHAFT[3-4],MAINSHIFT	1	
16	NT41160000A3	FORKSHAFT(1-2),MAINAHIFT	1	
17	TN41170000B3	FORK1ST~2ND,MAINSHIFT	1	
18	TN41180000B3	FORK3-4MAINSHAFT	1	
19	22351-060030	PIN, SPRING (6-30)	2	
20	TZ41200000A3	PACKING	1	
21	NT41580000A2	oil seal case	1	
22	22217-080000	WASHER, SPRING (Φ 08)	5	
23	26116-080222	BOLT7T(8X22)	5	
24	TN41250000A4	FIXINGBOLT	1	
25	23414-100000	PLAIN WASHER (D10)	1	
26	NT41270000A4	CAPBOLT	1	
27	23414-160000	WASHER,SEALING	2	
28	TT42020000A4	SPRING	3	
29	24190-100001	Ball, Steel (5/16)	3	
30	24311-000110	O-RING, DYNAMIC (Φ11)	1	
31	23871-010000	PLUG	1	
32	NT41350000A4	SHAFTSHUTTLECHANGE	1	
33	TN41360000A3	SHAFTSH.FORK	1	
34	NT41380000A4	LEVERSHUTTLESHAFT	1	
35	22351-060025	PIN, SPRING (6-25)	2	
36	22351-080028	PIN, SPRING (8-28)	1	
37	TZ41440000A4	PACKING	2	
38	23414-080000	WASHER, PLAIN (Φ8)	1	
39	NT41460000A4	BOLT	1	
40	TN41490000B3	FORK, SHUTTLE SHIFT	1	
41	NT41540000A4	HOLDER,SHUTTLESHIFT	1	
42	NT41550000A4	LINKC,SHUTTLE	1	
43	NT41430000A4	PARALLEL PIN	2	
44	NT36200000B3	SPACER,MISSIONCASE	1	
45	26216-120952	BOLT	1	

FIG C041-1 4520R(2014~)	TransmissionCaseShift	Year/Month 2020/02

KeyNo.	Part Number	Part Name	Quantity	Other
46	22217-120000	WASHER, SPRING (Φ 12)	1	
47	26716-120002	BOLT,CYLINDER HEAD(B)	1	
48	26216-140952	STUD BOLT	5	
49	22217-140000	WASHER, SPRING (Φ 14)	5	
50	26716-140002	NUT	5	
51	26013-121102	BOLT12X110	1	

FIG C041-2 4520R(2014~)	TransmissionCaseShift	Year/Month 2020/02

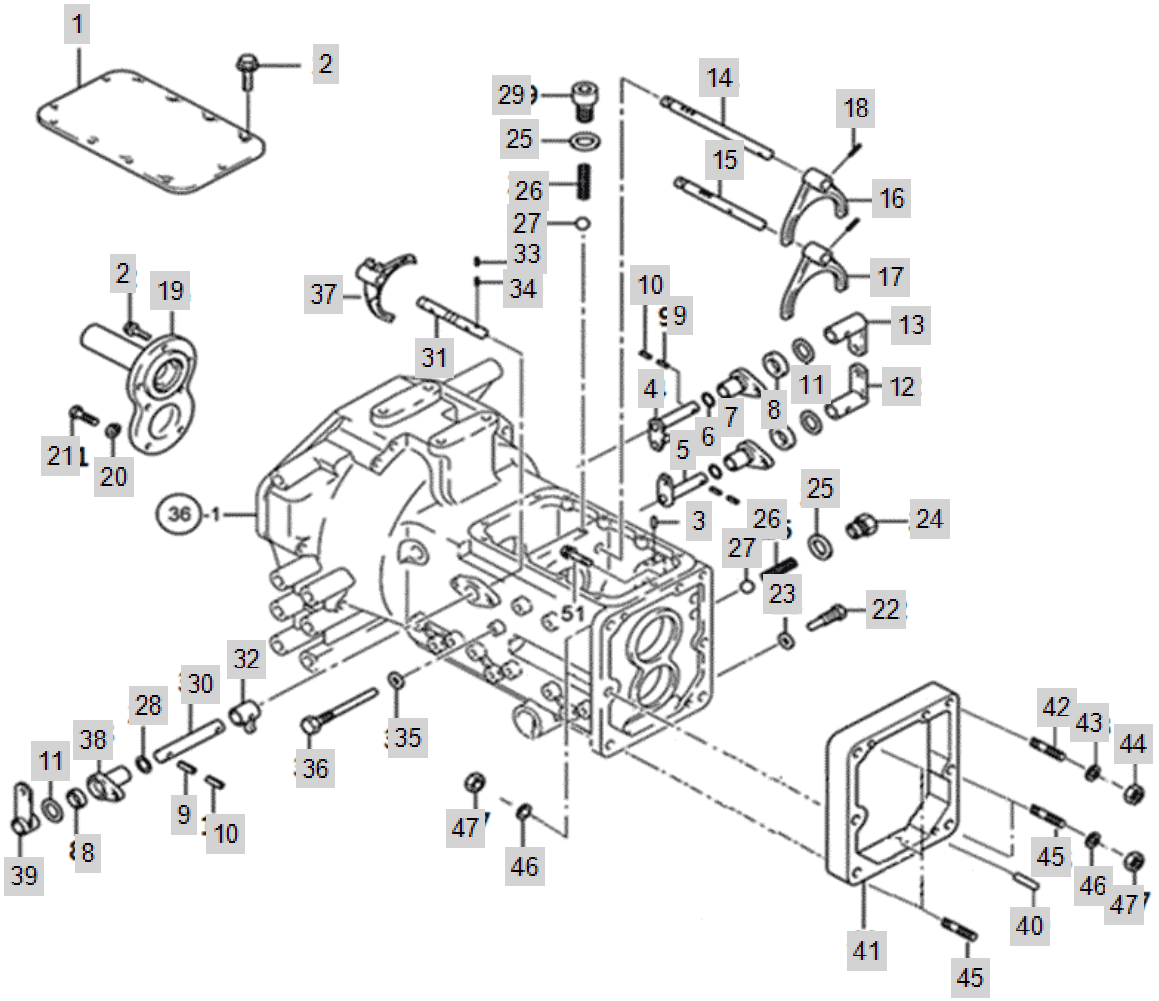

FIG C041-2 4520R(2014~)	TransmissionCaseShift	Year/Month 2020/02

KeyNo.	Part Number	Part Name	Quantity	Other
1	NT41010000C3	UPPERCOVER,T/M	1	
2	26013-080252	Bolt, Hexa (8-25)	19	
3	TN41070000A4	PIN	1	
4	NT41080000A4	LEVER3-4	1	
5	NT41600000A4	LEVER[1ST-2ND],MAINSHIFT	1	
6	24311-000210	O-RING, DYNAMIC (Φ21)	3	
7	TN41100000A4	HOLDERMAINSHIFT	2	
8	24421-173007	Seal, Oil (#17-30-07)	3	
9	22351-080028	PIN, SPRING (8-28)	2	
10	22351-080028	PIN, SPRING (8-28)	2	
11	TT65120000A4	COLLARB	3	
12	NT41130000B4	ARM(3-4), MAIN SHIFT	1	
13	NT41140000A4	ARM(1-2),MAINSHIFT	1	
14	NT41150000A3	FORKSHAFT[3-4],MAINSHIFT	1	
15	NT41160000A3	FORKSHAFT(1-2),MAINAHIFT	1	
16	TN41170000D3	FORK1ST~2ND,MAINSHIFT	1	
17	TN41180000D3	FORK3-4MAINSHAFT	1	
18	22351-060030	PIN, SPRING (6-30)	2	
19	NT41580000A2	oil seal case	1	
20	22217-080000	WASHER, SPRING (Φ 08)	5	
21	26116-080222	BOLT7T(8X22)	5	
22	TN41250000A4	FIXINGBOLT	1	
23	23414-100000	PLAIN WASHER (D10)	1	
24	NT41270000A4	CAPBOLT	1	
25	23414-160000	WASHER,SEALING	2	
26	TT42020000A4	SPRING	3	
27	24190-100001	Ball, Steel (5/16)	3	
28	24311-000110	O-RING, DYNAMIC (Φ11)	1	
29	23871-010000	PLUG	1	
30	NT41350000A4	SHAFTSHUTTLECHANGE	1	
31	TN41360000A3	SHAFTSH.FORK	1	
32	NT41380000A4	LEVERSHUTTLESHAFT	1	
33	22351-060025	PIN, SPRING (6-25)	2	
34	22351-080028	PIN, SPRING (8-28)	1	
35	22351-080028	PIN, SPRING (8-28)	1	
36	NT41460000A4	BOLT	1	
37	TN41490000C3	FORK,SHUTTLE	1	
38	NT41540000A4	HOLDER,SHUTTLESHIFT	1	
39	NT41550000C4	LINKC,SHUTTLE	1	
40	NT41430000A4	PARALLEL PIN	2	
41	NT36200000E3		1	
42	26216-120952	BOLT	1	
43	22217-120000	WASHER, SPRING (Φ 12)	1	
44	26716-120002	BOLT,CYLINDER HEAD(B)	1	
45	26216-140952	STUD BOLT	5	

FIG C041-2 4520R(2014~)	TransmissionCaseShift	Year/Month 2020/02

KeyNo.	Part Number	Part Name	Quantity	Other
46	22217-140000	WASHER, SPRING (Φ 14)	5	
47	26716-140002	NUT	5	
48	26013-121102	BOLT12X110	1	

FIG C042-1 4520R(2014~)	MAIN REVERSER GEAR	Year/Month 2020/02

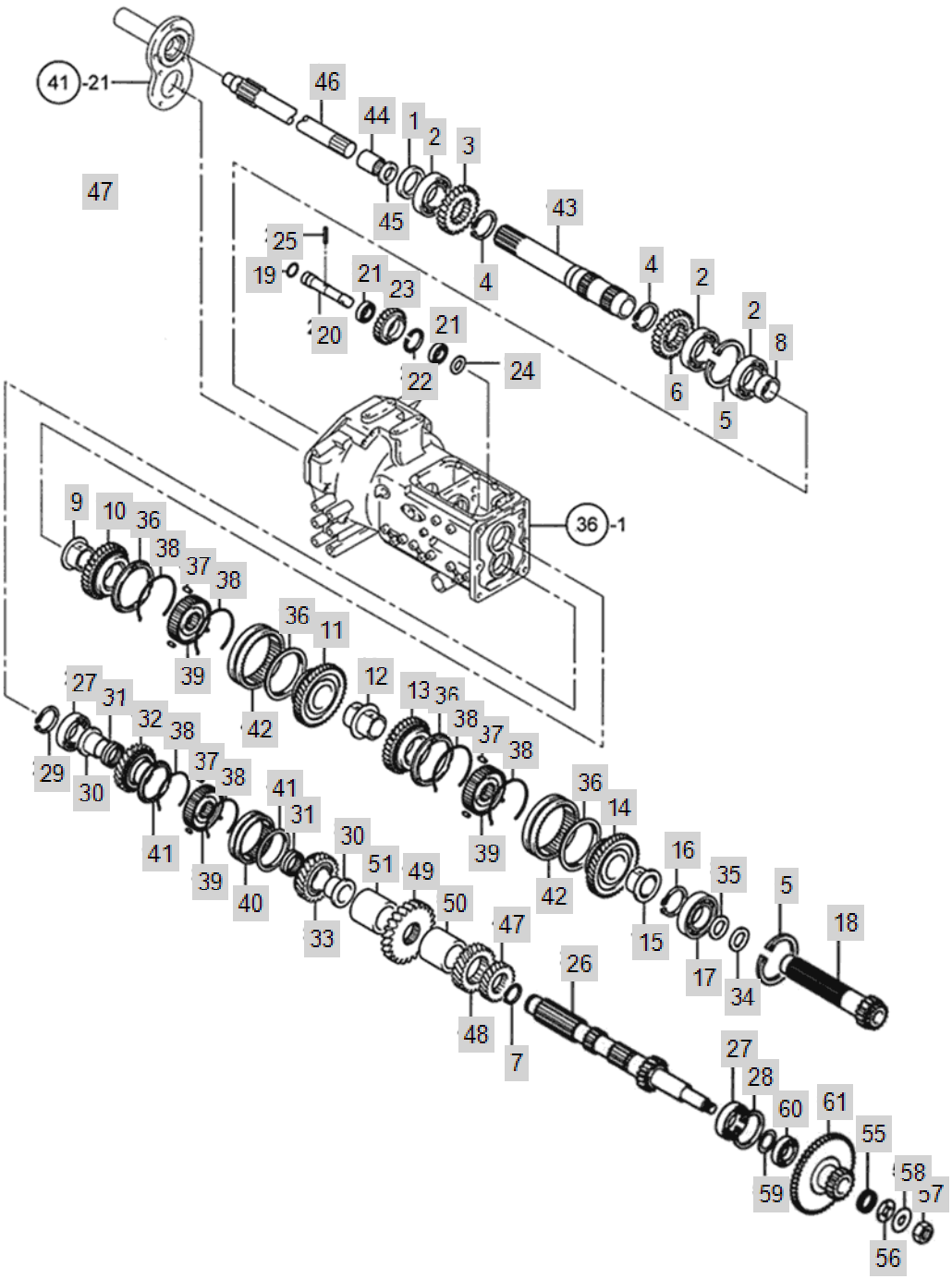

FIG C042-1 4520R(2014~)	MAIN REVERSER GEAR	Year/Month 2020/02

KeyNo.	Part Number	Part Name	Quantity	Other
1	NT42010000A4	OILSEAL	1	
2	24101-062084	Bearing, Ball (#6208)	3	
3	TN42030000A3	GEARREVERSER26T	1	
4	22242-000450	SNAP RING, SHAFT (Φ 45)	2	
5	22252-000800	RING, CIRCLIP (Φ 80)	2	
6	TN42060000A3	GEAR,FORWARD	1	
7	22242-000350	SNAP RING, SHAFT (Φ 35)	1	
8	TN42090000B4	BUSH	1	
9	TN42100000B4	BUSHA,GUIDE	1	
10	TN42950000A3	4SHIFT_GEAR(32T)	1	
11	TN42960000A3	3RDGEAR37T	1	
12	TN42180000B4	HUSHB,GUIDE	1	
13	TN42970000A3	GEAR 41T	1	
14	TN42980000A3	GEAR 1ST.43T	1	
15	TN42210000B4	BUSHC	1	
16	22292-000350	RING, CIRCLIP (Φ 35)	1	
17	24101-063074	Bearing, Ball (#6307)	1	
18	TN42240000C2	GUIDE SHAFT,MAINSHIFT GEAR	1	
19	24311-000200	O-RING, DYNAMIC (Φ20)	1	
20	TN42260000B3	IDLE SHAFT, REVERSE	1	
21	24101-060044	Bearing, Ball (#6004)	2	
22	22252-000420	RING, CIRCLIP (Φ 42)	1	
23	TN42300000A3	REVERSERGEARIDLE	1	
24	TN42310000B4	COLLAR	1	
25	22351-060030	PIN, SPRING (6-30)	1	
26	NT42350000A2	COUNTERSHAFTA'SSY	1	
27	24101-063064	Bearing, Ball (#6306)	2	
28	22252-000720	RING, CIRCLIP (Φ 72)	1	
29	22242-000300	SNAP RING, SHAFT (Φ 30)	1	
30	TN42480000A4	BUSH D, GUIDE	2	
31	24161-404527	NEEDLEBEARING	2	
32	TN42500000E3	REVERSE GEAR 30T	1	
33	TN42510000E3	GEAR, FORWARD 32T	1	
34	TT18050000A4	SHIMA	1	
35	TT18060000A4	SHIMB	1	
36	TN42690031A2	SYNCHRO.RING(OUTER)	6	
37	TN42650000A9	PIECE	9	
38	TN42660000A9	SPRING	6	
39	TN42670000A3	HUB	3	
40	TN42680000A9	SLEEVE	1	
41	TN42690000A9	SYNCHRO.RINGASS'Y	2	
43	NT42830000A3	main shaft(outer)	1	
44	24550-020120	DRYBUSH	1	
45	24413-203007	Seal, Oil (#20-30-07)	1	
46	NT42730000A3	MAIN SHAFT, INNER	1	

FIG C042-1 4520R(2014~)	MAIN REVERSER GEAR	Year/Month 2020/02

KeyNo.	Part Number	Part Name	Quantity	Other
47	NT42760000A3	GEAR2ND,COUNTER	1	
48	NT42770000A3	GEAR3RD,COUNTER	1	
49	NT42780000A3	GEAR4TH,COUNTER	1	
50	NT42790000A4	SPACER,FRONT	1	
51	NT42800000A4	SPACER,REAR	1	
59	22252-000190	RING, CIRCLIP (Φ 19)	1	
60	TZ43010000A3	COLLAR,COUPLING	1	
61	22252-000320	RING, CIRCLIP (Φ 32)	1	

FIG C042-2 4520R(2014~)	MAIN REVERSER GEAR	Year/Month 2020/02

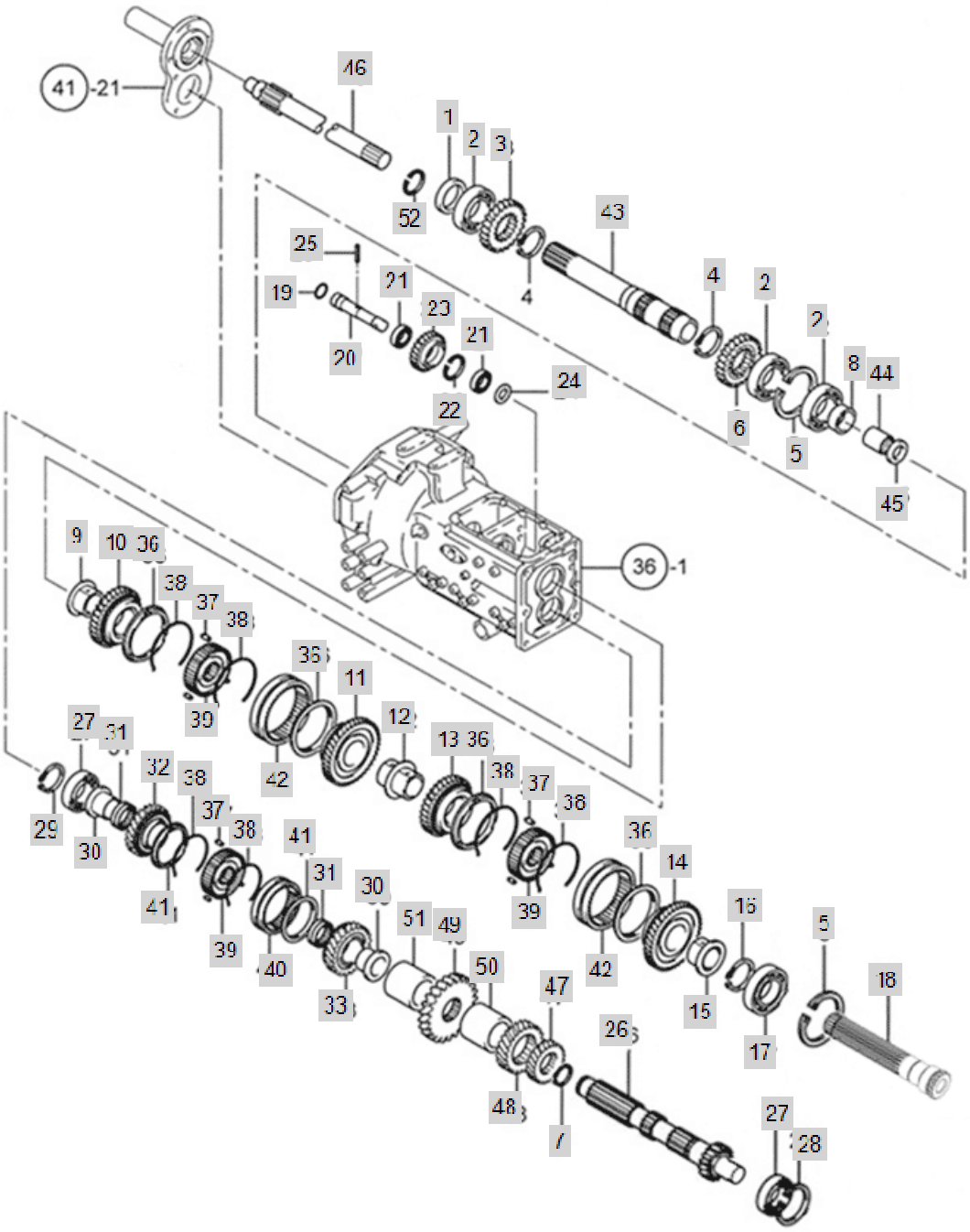

FIG C042-2 4520R(2014~)	MAIN REVERSER GEAR	Year/Month 2020/02

KeyNo.	Part Number	Part Name	Quantity	Other
1	NT42010000A4	OILSEAL	1	
2	24101-062084	Bearing, Ball (#6208)	3	
3	TN42030000A3	GEARREVERSER26T	1	
4	22242-000450	SNAP RING, SHAFT (Φ 45)	2	
5	22252-000800	RING, CIRCLIP (Φ 80)	2	
6	TN42060000A3	GEAR,FORWARD	1	
7	22242-000350	SNAP RING, SHAFT (Φ 35)	1	
8	TN42090000B4	BUSH	1	
9	TN42100000B4	BUSHA,GUIDE	1	
10	TN42950000A3	4SHIFT_GEAR(32T)	1	
11	TN42960000A3	3RDGEAR37T	1	
12	TN42180000B4	HUSHB,GUIDE	1	
13	TN42970000A3	GEAR 41T	1	
14	TN42980000A3	GEAR 1ST.43T	1	
15	TN42210000B4	BUSHC	1	
16	22292-000350	RING, CIRCLIP (Φ 35)	1	
17	24101-063074	Bearing, Ball (#6307)	1	
18	TA00055279A	MAIN GEAR SHAFT	1	
19	24311-000200	O-RING, DYNAMIC (Φ20)	1	
20	TN42260000B3	IDLE SHAFT, REVERSE	1	
21	24101-060044	Bearing, Ball (#6004)	2	
22	22252-000420	RING, CIRCLIP (Φ 42)	1	
23	TN42300000A3	REVERSERGEARIDLE	1	
24	TN42310000B4	COLLAR	1	
25	22351-060030	PIN, SPRING (6-30)	1	
26	NT42350000A2	COUNTERSHAFTA'SSY	1	
27	24101-063064	Bearing, Ball (#6306)	2	
28	22252-000720	RING, CIRCLIP (Φ 72)	1	
29	22242-000300	SNAP RING, SHAFT (Φ 30)	1	
30	TN42480000A4	BUSH D, GUIDE	2	
31	24161-404527	NEEDLEBEARING	2	
32	TN42500000E3	REVERSE GEAR 30T	1	
33	TN42510000E3	GEAR, FORWARD 32T	1	
36	TN42640000A2	RING, SYNCHRO.	4	
37	TN42650000A9	PIECE	9	
38	TN42660000A9	SPRING	6	
39	TN42670000A3	HUB	3	
40	TN42680000A9	SLEEVE	1	
41	TN42690000A9	SYNCHRO.RINGASS'Y	2	
42	TN42700000B2	SLEEVE	2	
43	NT42830000A3	main shaft(outer)	1	
44	24550-020120	DRYBUSH	1	
45	24413-203007	Seal, Oil (#20-30-07)	1	
46	NT42730000A3	MAIN SHAFT, INNER	1	
47	NT42760000A3	GEAR2ND,COUNTER	1	

FIG C042-2 4520R(2014~)	MAIN REVERSER GEAR	Year/Month 2020/02

KeyNo.	Part Number	Part Name	Quantity	Other
48	NT42770000A3	GEAR3RD,COUNTER	1	
49	NT42780000A3	GEAR4TH,COUNTER	1	
50	NT42790000A4	SPACER,FRONT	1	
51	NT42800000A4	SPACER,REAR	1	
52	22252-000800	RING, CIRCLIP (Φ 80)	1	

FIG C043 4520R(2014~)	FrontDrive&RangeShiftGear	Year/Month 2020/02

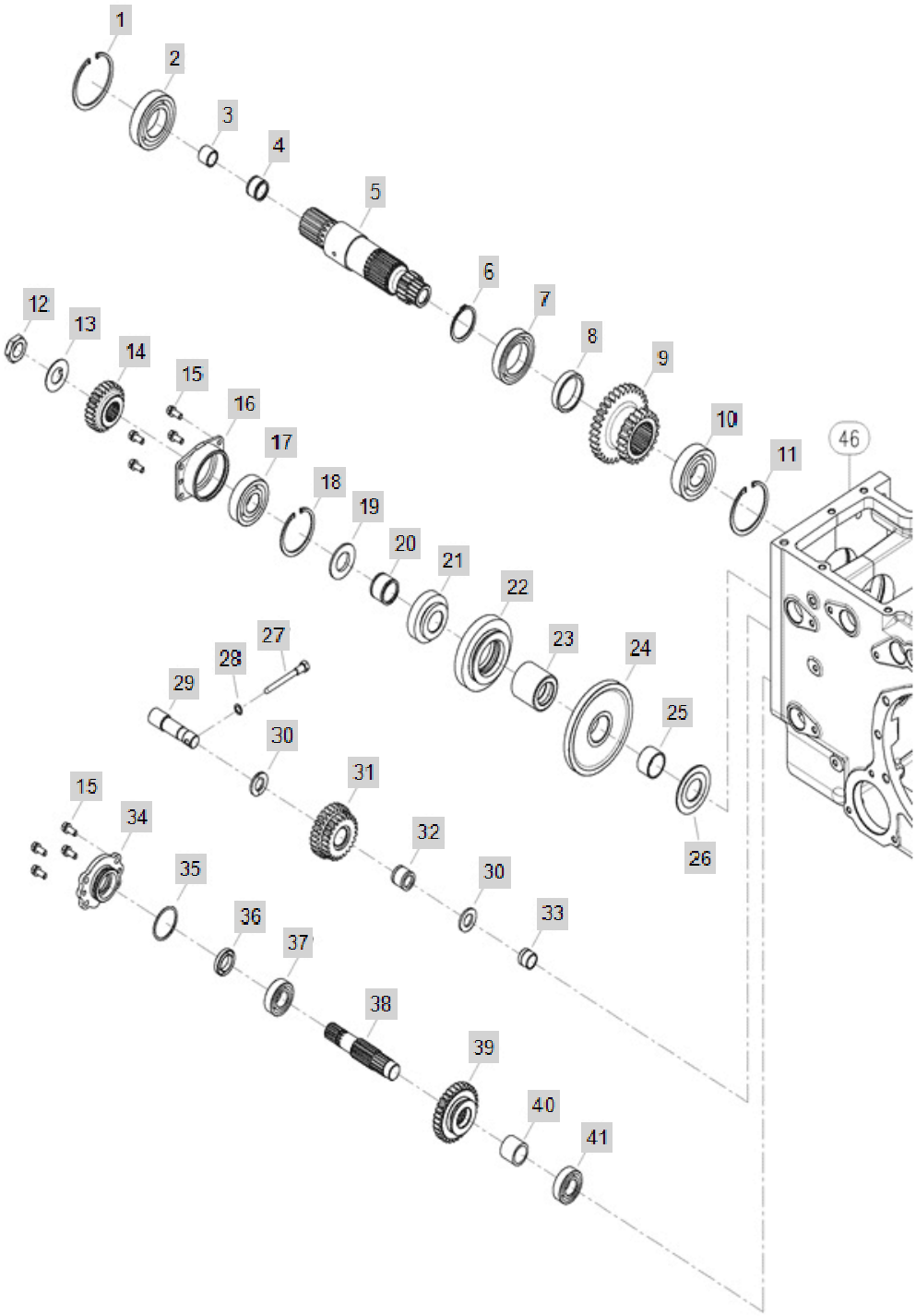

FIG C043 4520R(2014~)	FrontDrive&RangeShiftGear	Year/Month 2020/02

KeyNo.	Part Number	Part Name	Quantity	Other
1	22242-000500	SNAP RING, SHAFT (Φ50)	1	
2	24101-062094	BALL BEARING (#6209)	1	
3	TN45180000A4	BUSH,BEARING	1	
4	24161-253020	Bearing, Neddle (#25-30-20)	1	
5	TN43040000A3	GEAR16RANGESHIFT	1	
6	22242-000500	SNAP RING, SHAFT (Φ50)	1	
7	24101-060104	Bearing, Ball (#6010)	1	
8	TN43060000A4	COLLAR	1	
9	TA00031461A	GEAR2ND3RDRANGESHIFT	1	
10	24101-063074	Bearing, Ball (#6307)	1	
11	22252-000800	RING, CIRCLIP (Φ 80)	1	
12	TN43110000A4	LOCKNUT	1	
13	TT57020000A4	WASHER	1	
14	TN43130000A3	GEAR25FRONTDRIVE	1	
15	26013-080202	Bolt, Hexa (8-20)	8	
16	TN43150000A3	CASEBEARING	1	
17	24101-063064	Bearing, Ball (#6306)	1	
18	22252-000720	RING, CIRCLIP (Φ 72)	1	
19	TN43190000A4	THRUSTWASHER	1	
20	24161-323827	Bearing, Neddle (#32-38-27)	1	
21	TA00031460A	GEAR16,RANGE SHIFT 3RD	1	
22	TN43220000B3	GEAR 30T,RANGE SHIFT 2ND	1	
23	TN43230000B3	CALLAR	1	
24	TN43240000B3	GEAR 56T,SUB SHIFT 1ST	1	
25	TT57080000A4		1	
26	TT57100000B4	WASHER,THRUST	1	
27	TN43330000A4	BOLT	1	
28	23414-100000	PLAIN WASHER (D10)	1	
29	TN43260000A4	SHAFT, FRONT DRIVE IDLE	1	
30	TN43270000A4	THRUSTWASHER	2	
31	TN43290000A3	GEARFRONTDRUVEIDLE	1	
32	24161-202825	NEEDLE BEARIN (#20-28-25)	1	
33	TN43300000A4	COLLAR	1	
34	TN43350000A3	CASEOILSEAL	1	
35	TN43360000A4	O-RING	2	
36	24421-254008	Seal, Oil (#25-40-08)	1	
37	24101-062054	Bearing, Ball (#6205)	1	
38	TN43390000A3	SHAFTFRONTDRIVELINE	1	
39	TN43400000A3	GEARFRONTDRIVE	1	
40	TN43450000A4	COLLAR	1	
41	24101-062054	Bearing, Ball (#6205)	1	

FIG C044 4520R(2014~)	전륜,부변속,초저속레버(2019.06~)	Year/Month 2020/02

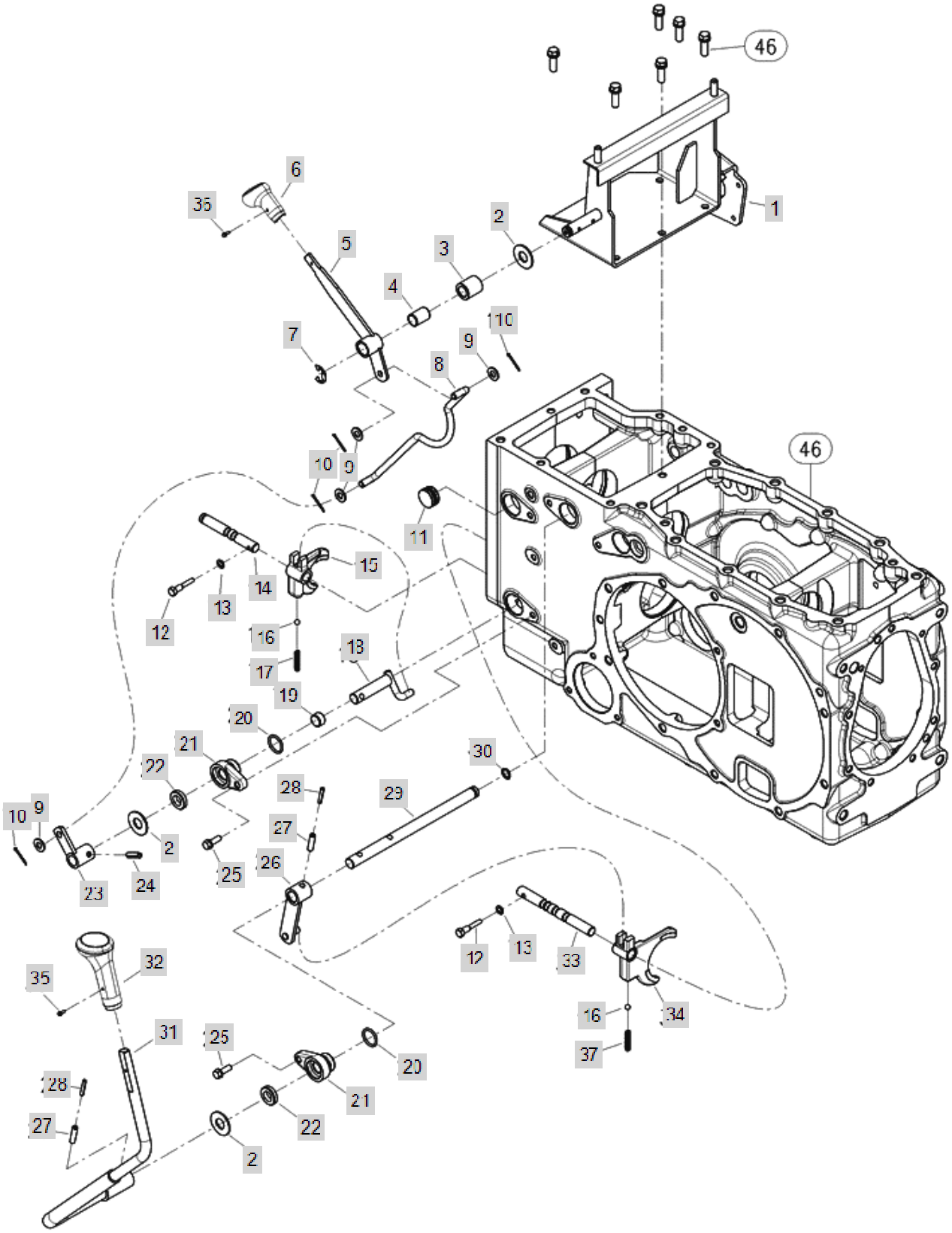

FIG C044 4520R(2014~)	전륜,부변속,초저속레버(2019.06~)	Year/Month 2020/02

KeyNo.	Part Number	Part Name	Quantity	Other
1	TA00002757D	STAY ASS'Y,SEATRAIL	1	
2	TT65120000A4	COLLARB	3	
3	TZ44080000A4	BOSSCREEPER	1	
4	TT70080000A4	BUSH	1	
5	NT44100000B3	Lever, Front Drive	1	
6	TA00056015A	LEVER, FRONT DRIVE	1	
6-1	TA00015827A	KNOB, FRONT DRIVE LEVER	1	delete
7	22272-000150	RING, CIRCLIP (Φ 15)	1	
8	NT44140000A4	ROD,FRONTDRIVE	1	
9	22137-100000	WASHER, PLAIN (Φ 10)	4	
10	22417-250250	PIN , COTTER (2-25)	4	
11	TZ44610000A4	PLUG	1	
12	TN44400000A4	BOLT	2	
13	23414-080000	WASHER, PLAIN (Φ8)	2	
14	TN44230000A3	SHAFTFRONTDRIVEFORK	1	
15	TN44220000A3	FORKFRONTDRIVE	1	
16	24190-100001	Ball, Steel (5/16)	2	
17	TT42020000A4	SPRING	2	
18	TN44380000A4	LEVERASS'YF.DRIVE	1	
19	TT70090000A4	BUSH	1	
20	24321-000250	O-RING	3	
21	TN44300000A4	Holder, Shift Arm	2	
22	24421-173007	Seal, Oil (#17-30-07)	2	
23	NT44360000A4	LEVER,A'SSYB.FRONTDRIVE	1	
24	22351-080030	PIN, SPRING (8-30)	1	
25	26013-080252	Bolt, Hexa (8-25)	2	
26	TN44440000D4	LEVERASS`Y(B),RANGESHAFT	1	
27	22351-080030	PIN, SPRING (8-30)	2	
28	22351-050030	PIN, SPRING (5-03)	2	
29	TN44520000B3	SHAFT,RANGESHIFTLEVER	1	
30	TN46180000A4	O-RING	1	
31	TA00001060C	LEVER, SUB SHIFT	1	
32	TA00058723A	KNOB	1	
32-1	TA00016324B	KNOB, RANGE SHIFT	1	delete
33	TN44410000B3	SHAFT,RANGESHIFTFORK	1	
34	TN44420000A3	FORKRANGESHIFT	1	
35	26023-040162	SCREW	1	
36	26023-040082	SCREW AND WASHER ASSEMBLY	1	
37	TA00048409A	SPRING, FORK	1	

FIG C045-1 4520R(2014~)	GearINDPTOSpeedChange	Year/Month 2020/02

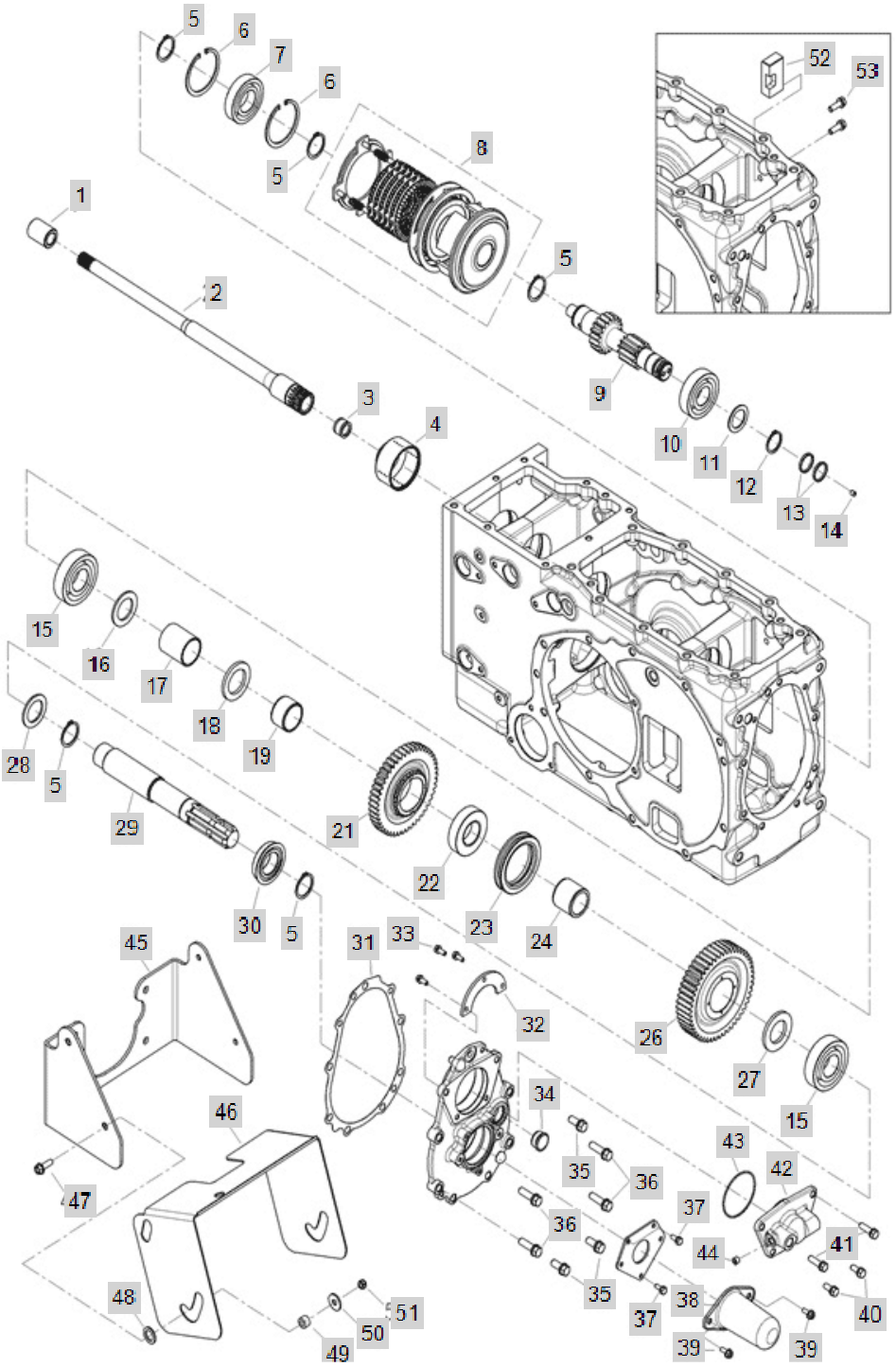

FIG C045-1 4520R(2014~)	GearINDPTOSpeedChange	Year/Month 2020/02

KeyNo.	Part Number	Part Name	Quantity	Other
1	TN45200000A4	JOINT	1	
2	TZ45220000C	SHAFT,P.T.O DRIVE	1	
3	24161-182417	Bearing, Neddle (#18-24-17)	1	
4	NT45480000A3	PTO COUPLING	1	
5	22242-000350	SNAP RING, SHAFT (Φ 35)	5	
6	22252-000720	RING, CIRCLIP (Φ 72)	2	
7	24101-062074	BALL BEARING (#6207)	1	
8	TA00026514A	PTO CLUTCH PACK	1	
9	NT45920000A2	SHAFT, PTO SHIFT	1	
10	24101-063064	Bearing, Ball (#6306)	1	
11	TN45520000A4	COLLAR	1	
12	22242-000300	SNAP RING, SHAFT (Φ 30)	1	
13	TT64070000A4	SEAL RING	2	
14	TT64080000A4	RETAININGSCREWM7X1	1	
15	24101-063074	Bearing, Ball (#6307)	2	
16	NT45670000A4	Thrust Washer	1	
17	NT45680000A4	Spacer	1	
18	NT45440000A4	COLLAR	1	
19	TA00033210A	NEEDLE BUSH D	2	
21	TA00033211A	GEAR 46T, PTO	1	
22	TZ45100000A3	HUB,P.T.O	2	
23	TZ45110000B4	SLEEVE,P.T.O	2	
24	TA00033209A	NEEDLE BUSH B	1	
26	TA00033212A	GEAR 49T, PTO	1	
27	TZ45140000A4	COLLAR	1	
28	TN45120000A4	WASHER	1	
29	NT45130000B3	shaft, PTO	1	
30	TT62040000A3	PTO OIL SEAL QLF35X60X19	1	
31	NT45740000A3	PACKING, PTO SHAFT HOUSING	1	
32	NT45640000A4	Bearing Cover	1	
33	26013-060162	Bolt, Hexa (6-16)	3	
34	TCA8130000A4	SIGHTGLASS -> NT45690000A4	1	
35	26013-100252	SCREW,CAPTIVEWASHERCAP	3	
36	26013-100352	Bolt, Hexa (10-35)	4	
37	26013-060162	Bolt, Hexa (6-16)	3	
38	TT80030000A3	P.T.OCOVER	1	
39	26106-060162	HEXFLANGEBOLT	2	
40	26013-080202	Bolt, Hexa (8-20)	2	
41	26013-080302	HEX BOLT W/WASHER	2	
42	NT45620000A3	Seal Case	1	
43	24341-000700	O-RING, FIX (Φ70)	1	
44	23871-010000	PLUG	1	
45	TA00000738B	BRACKET, PTO SHAFT COVER	1	
46	TA00000739A	COVER, PTO SHAFT	1	
47	26106-080252	SCREW,HEXFLANGEHEADCAP	4	

FIG C045-1 4520R(2014~)	GearINDPTOSpeedChange	Year/Month 2020/02

KeyNo.	Part Number	Part Name	Quantity	Other
48	FB80520000A4	RUBBER	8	
49	FB80550000A4	BUSH	4	
50	22157-080000	WASHER, PLAIN (Φ 08)	4	
51	26347-080002	Unut	4	
52	NT45980000A4	BRAKE HOLDER	1	
53	26013-080252	Bolt, Hexa (8-25)	2	

FIG C045-2 4520R(2014~)	GEAR, IND PTO SPEED CHANGE(2014.12)	Year/Month 2020/02

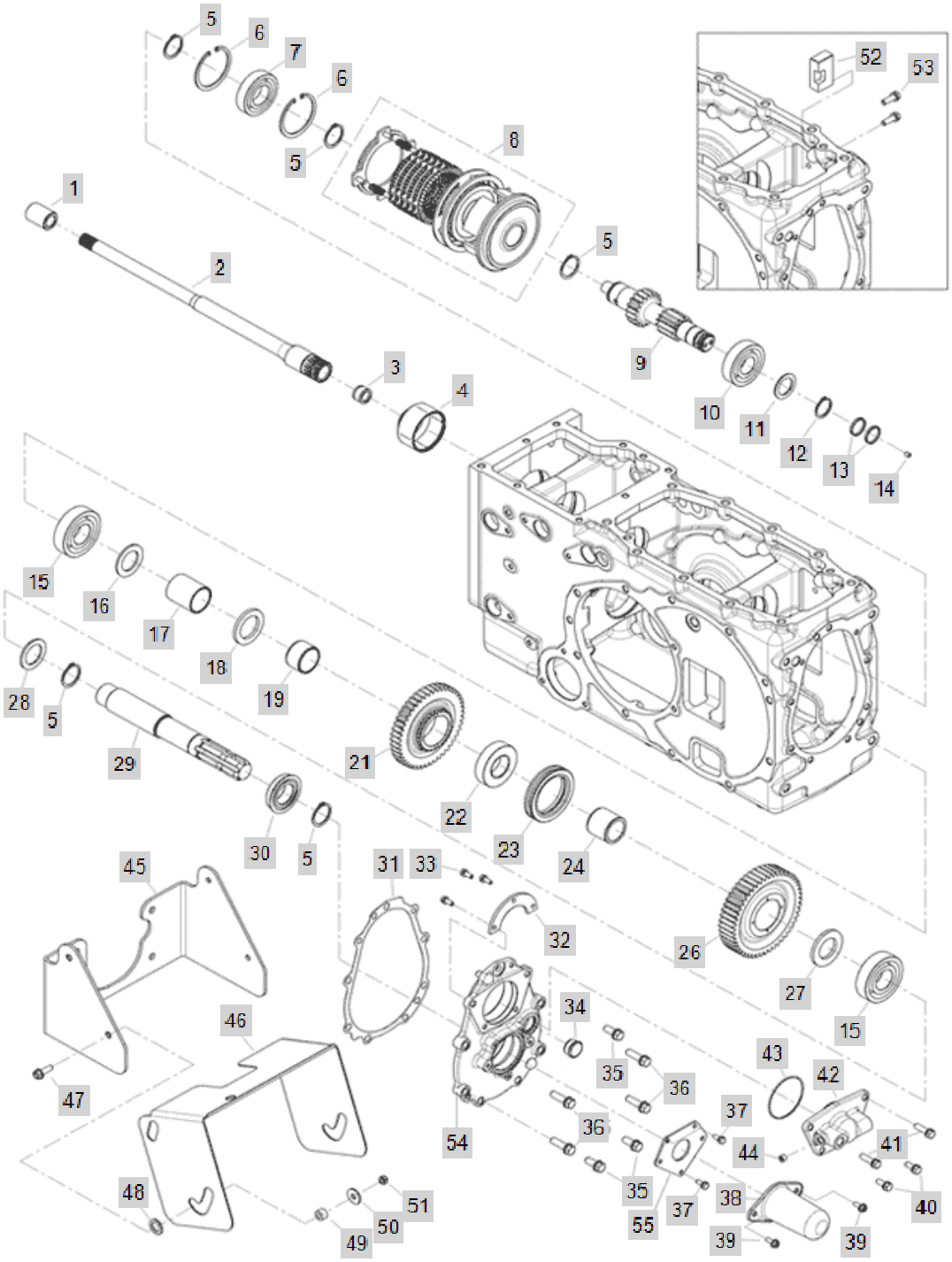

FIG C045-2 4520R(2014~)	GEAR, IND PTO SPEED CHANGE(2014.12)	Year/Month 2020/02

KeyNo.	Part Number	Part Name	Quantity	Other
1	TN45200000A4	JOINT	1	
2	TZ45220000C	SHAFT,P.T.O DRIVE	1	
3	24161-182417	Bearing, Neddle (#18-24-17)	1	
4	NT45480000A3	PTO COUPLING	1	
5	22242-000350	SNAP RING, SHAFT (Φ 35)	5	
6	22252-000720	RING, CIRCLIP (Φ 72)	2	
7	24101-062074	BALL BEARING (#6207)	1	
8	TA00026514A	PTO CLUTCH PACK	1	
9	NT45920000A2	SHAFT, PTO SHIFT	1	
10	24101-063064	Bearing, Ball (#6306)	1	
11	TN45520000A4	COLLAR	1	
12	22242-000300	SNAP RING, SHAFT (Φ 30)	1	
13	TT64070000A4	SEAL RING	2	
14	TT64080000A4	RETAININGSCREWM7X1	1	
15	24101-063074	Bearing, Ball (#6307)	2	
16	NT45670000A4	Thrust Washer	1	
17	NT45680000A4	Spacer	1	
18	NT45440000A4	COLLAR	1	
19	TA00033210A	NEEDLE BUSH D	2	
21	TA00033211A	GEAR 46T, PTO	1	
22	TZ45100000A3	HUB,P.T.O	2	
23	TZ45110000B4	SLEEVE,P.T.O	2	
24	TA00033209A	NEEDLE BUSH B	1	
26	TA00033212A	GEAR 49T, PTO	1	
27	TZ45140000A4	COLLAR	1	
28	TN45120000A4	WASHER	1	
29	NT45130000B3	shaft, PTO	1	
30	TT62040000A3	PTO OIL SEAL QLF35X60X19	1	
31	NT45740000A3	PACKING, PTO SHAFT HOUSING	1	
32	NT45640000A4	Bearing Cover	1	
33	26013-060162	Bolt, Hexa (6-16)	3	
34	TCA8130000A4	SIGHTGLASS -> NT45690000A4	1	
35	26013-100252	SCREW,CAPTIVEWASHERCAP	3	
36	26013-100352	Bolt, Hexa (10-35)	4	
37	26013-060162	Bolt, Hexa (6-16)	3	
38	TT80030000A3	P.T.OCOVER	1	
39	26106-060162	HEXFLANGEBOLT	2	
40	26013-080202	Bolt, Hexa (8-20)	2	
41	26013-080302	HEX BOLT W/WASHER	2	
42	NT45620000A3	Seal Case	1	
43	24341-000700	O-RING, FIX (Φ70)	1	
44	23871-010000	PLUG	1	
45	TA00000738B	BRACKET, PTO SHAFT COVER	1	
46	TA00000739A	COVER, PTO SHAFT	1	
47	26106-080252	SCREW,HEXFLANGEHEADCAP	4	

FIG C045-2 4520R(2014~)	GEAR, IND PTO SPEED CHANGE(2014.12)	Year/Month 2020/02

KeyNo.	Part Number	Part Name	Quantity	Other
48	FB80520000A4	RUBBER	8	
49	FB80550000A4	BUSH	4	
50	22157-080000	WASHER, PLAIN (Φ 08)	4	
51	26347-080002	Unut	4	
52	NT45980000A4	BRAKE HOLDER	1	
53	26013-080252	Bolt, Hexa (8-25)	2	
54	5NT45510000A	PTO SHAFT	1	
55	NT45720000A4	Plate	1	

FIG C045-3 4520R(2014~)	GEAR, IND PTO SPEED CHANGE(2018~)	Year/Month 2020/02

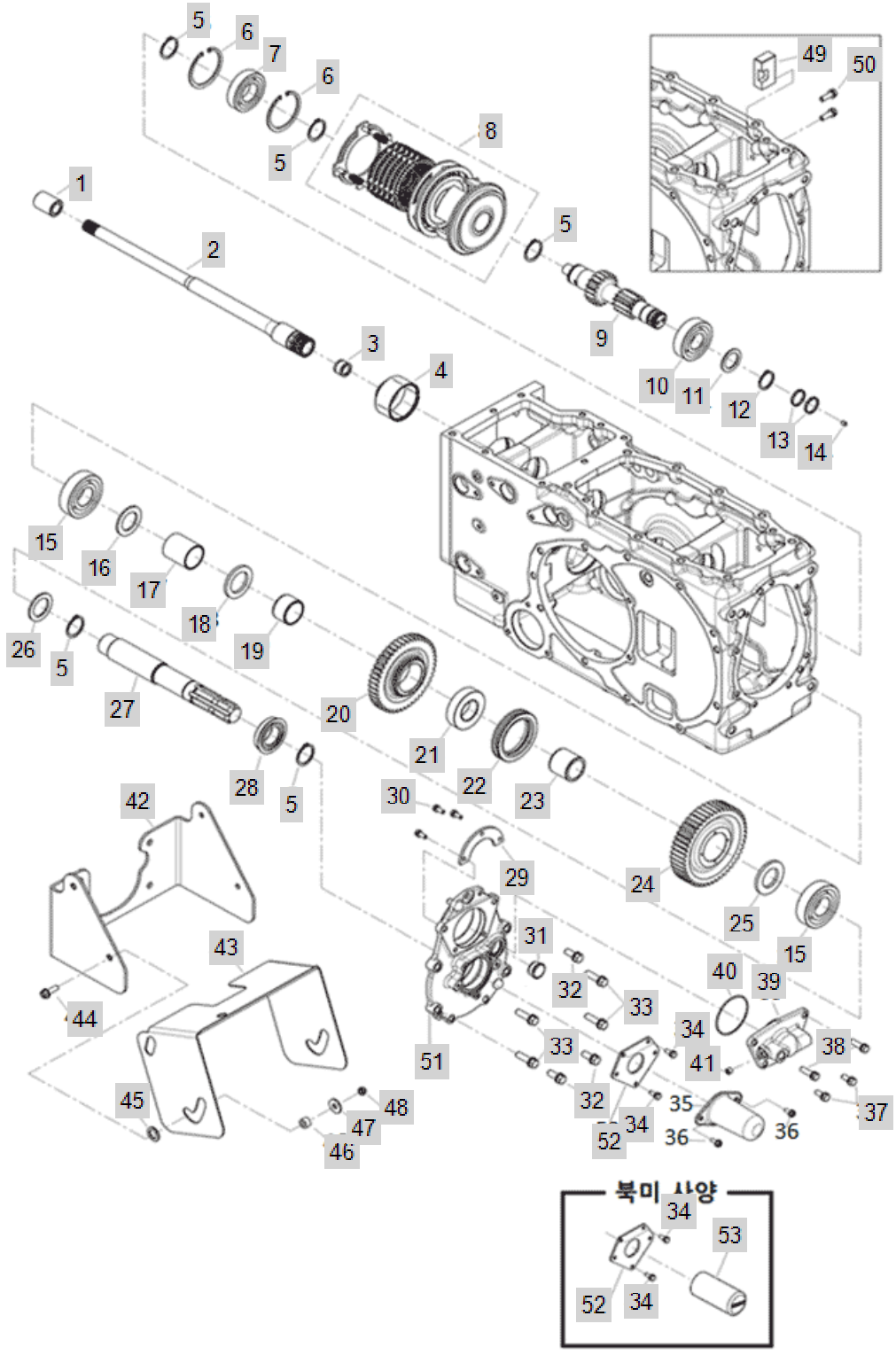

FIG C045-3 4520R(2014~)	GEAR, IND PTO SPEED CHANGE(2018~)	Year/Month 2020/02

KeyNo.	Part Number	Part Name	Quantity	Other
1	TN45200000A4	JOINT	1	
2	TZ45220000C	SHAFT,P.T.O DRIVE	1	
3	24161-182417	Bearing, Neddle (#18-24-17)	1	
4	NT45480000A3	PTO COUPLING	2	
5	22242-000350	SNAP RING, SHAFT (Φ 35)	5	
6	22252-000720	RING, CIRCLIP (Φ 72)	2	
7	24101-062074	BALL BEARING (#6207)	1	
8	TA00026514C	PTO CLUTCH PACK	1	
9	NT45920000A2	SHAFT, PTO SHIFT	1	
10	24101-063064	Bearing, Ball (#6306)	1	
11	TN45520000A4	COLLAR	1	
12	22242-000300	SNAP RING, SHAFT (Φ 30)	1	
13	TT64070000B4	SEAL RING	2	
14	TT64080000A4	RETAININGSCREWM7X1	1	
15	24101-063074	Bearing, Ball (#6307)	2	
16	NT45670000B4	THRUST WASHER	1	
17	NT45680000B4	SPACER	1	
18	NT45440000B4	COLLAR	1	
19	TA00033210A	NEEDLE BUSH D	2	
20	TA00033211B	GEAR 46T, PTO	1	
21	TZ45100000A3	HUB,P.T.O	2	
22	TZ45110000C4	SLEEVE,P.T.O	2	
23	TA00033209A	NEEDLE BUSH B	1	
24	TA00033212B	GEAR 49T, PTO	1	
25	TZ45140000A4	COLLAR	1	
26	TN45120000A4	WASHER	1	
27	NT45130000B3	shaft, PTO	1	
28	TT62040000A3	PTO OIL SEAL QLF35X60X19	1	
29	NT45640000A4	Bearing Cover	1	
30	26013-060162	Bolt, Hexa (6-16)	3	
31	TCA8130000A4	SIGHTGLASS -> NT45690000A4	1	
32	26013-100252	SCREW,CAPTIVEWASHERCAP	3	
33	26013-100352	Bolt, Hexa (10-35)	4	
34	26013-060162	Bolt, Hexa (6-16)	3	
37	26013-080202	Bolt, Hexa (8-20)	2	
38	26013-080302	HEX BOLT W/WASHER	2	
39	NT45620000A3	Seal Case	1	
40	24341-000700	O-RING, FIX (Φ70)	1	
41	23871-010000	PLUG	1	
42	TA00000738D	BRACKET, PTO SHAFT COVER	1	
43	TA00000739F	COVER, PTO SHAFT	1	
44	26106-080252	SCREW,HEXFLANGEHEADCAP	4	
45	FB80520000A4	RUBBER	8	
46	FB80550000A4	BUSH	4	
47	22157-080000	WASHER, PLAIN (Φ 08)	4	

FIG C045-3 4520R(2014~)	GEAR, IND PTO SPEED CHANGE(2018~)	Year/Month 2020/02

KeyNo.	Part Number	Part Name	Quantity	Other
48	26347-080002	Unut	4	
49	NT45980000A4	BRAKE HOLDER	1	
50	26013-080252	Bolt, Hexa (8-25)	2	
51	NT45510000B1	HOUSING, PTO SHAFT	1	
52	NT45720000A4	Plate	1	
53	TA00046868A	COVER, PTO	1	

FIG C046-1 4520R(2014~)	RearAxleCasePTOShift	Year/Month 2020/02

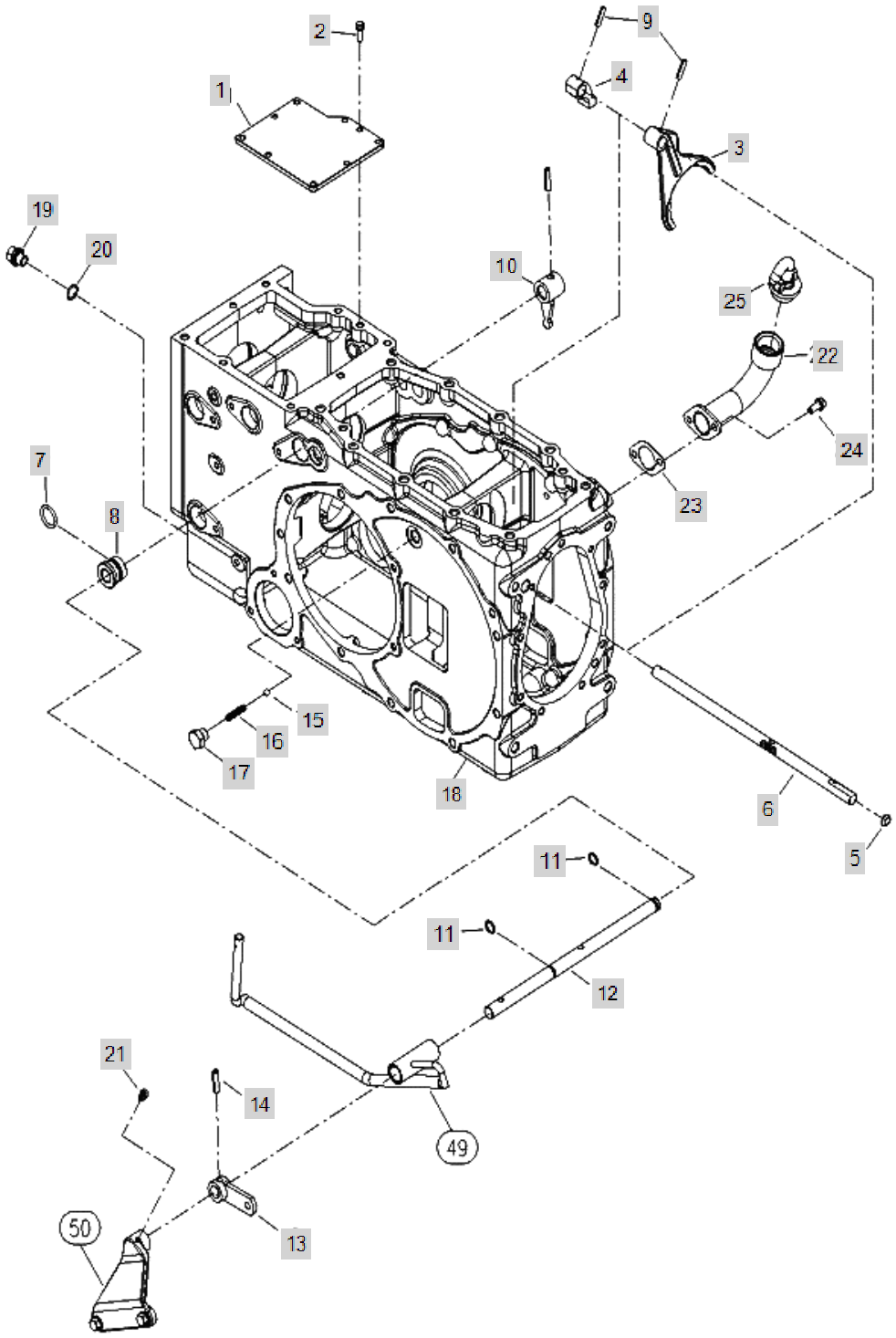

FIG C046-1 4520R(2014~)	RearAxleCasePTOShift	Year/Month 2020/02

KeyNo.	Part Number	Part Name	Quantity	Other
1	TN46010000B3	COVER,REALAXLECASE	1	
2	26013-100322	BOLT	9	
3	NT46100000B3	SHAFT,P.T.OFORK3-	1	
4	TN46110000A4	SHIFTER	1	
5	27260-150000	Cap, Seal (d=15mm)	2	
6	NT46750000A3	FORK SHAFT, PTO SHIFT	1	
7	24311-000240	O-RING, DYNAMIC (Φ24)	1	
8	TA00019206A	HOLDER	1	
9	22351-060025	PIN, SPRING (6-25)	2	
10	TN46160000A4	ARM, SHIFTER	1	
11	TN46180000A4	O-RING	2	
12	TA00019204A	SHAFT PTO SHIFT LEVER	1	
13	TN46240000C4	LEVER,P.T.OSHAFT	1	
14	22351-080030	PIN, SPRING (8-30)	2	
15	24190-100001	Ball, Steel (5/16)	1	
16	TT42020000A4	SPRING	1	
17	TN46330000A4	BOLT	1	
18	NT46610000G0	REAR AXLE CASE	1	
19	TB28120000C4	DRAIN PLUG	1	
20	24311-000160	O-RING, DYNAMIC (Φ16)	1	
21	TN46380000A4	GREASENIPPLE	1	
22	NT46420000B3	OILINTAKEASS'Y	1	
23	NT46430000A4	PACKING,OILINTAKE	1	
24	26013-080202	Bolt, Hexa (8-20)	2	
25	FT80370000A4	CAP,INTAKE	1	

FIG C046-2 4520R(2014~)	REAR AXLE CASE, PTO SHIFT	Year/Month 2020/02

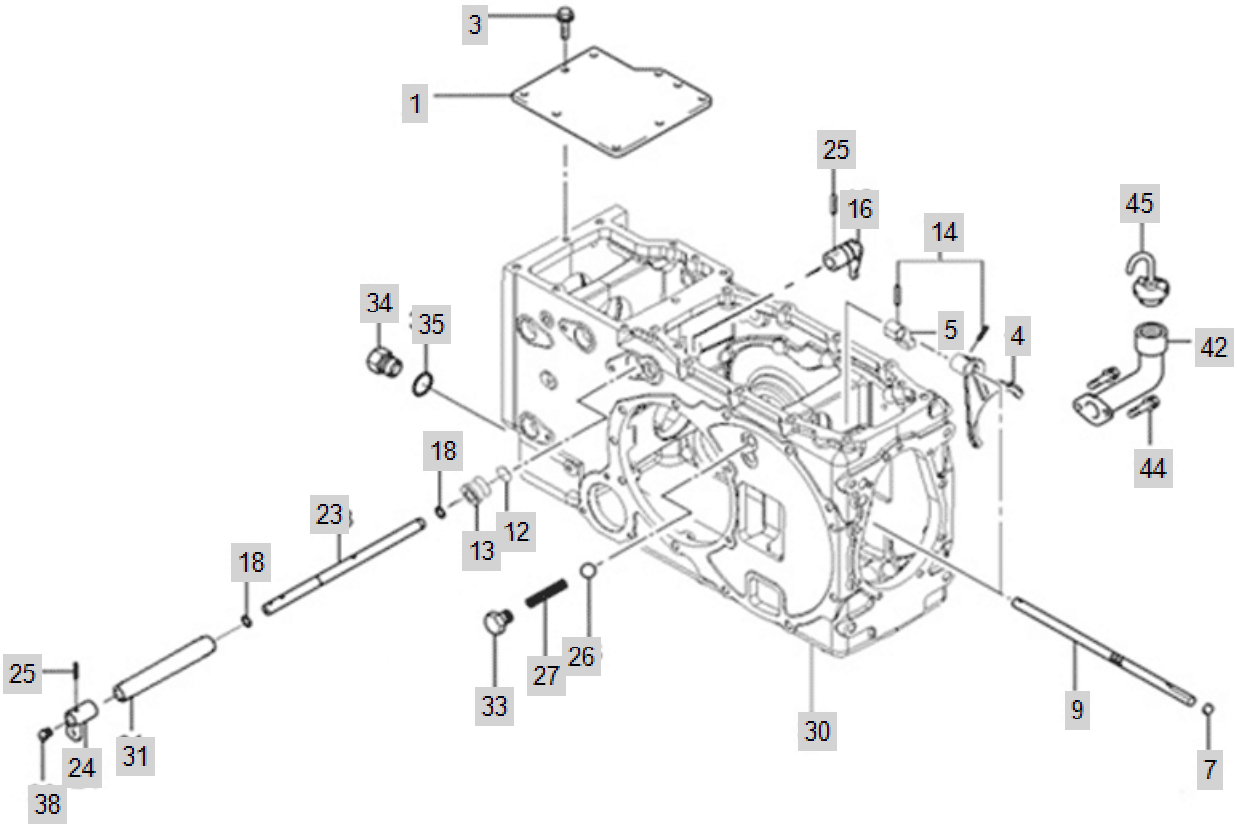

FIG C046-2 4520R(2014~)	REAR AXLE CASE, PTO SHIFT	Year/Month 2020/02

KeyNo.	Part Number	Part Name	Quantity	Other
1	TN46010000B3	COVER,REALAXLECASE	1	
3	26013-100322	BOLT	9	
4	NT46100000C3	SHAFT,P.T.OFORK3-	1	
5	TN46110000A4	SHIFTER	1	
7	27260-150000	Cap, Seal (d=15mm)	2	
9	NT46750000A3	FORK SHAFT, PTO SHIFT	1	
12	24311-000240	O-RING, DYNAMIC (Φ24)	1	
13	TA00019206A	HOLDER	1	
14	22351-060025	PIN, SPRING (6-25)	2	
16	TN46160000A4	ARM, SHIFTER	1	
18	TN46180000A4	O-RING	2	
23	TA00019204A	SHAFT PTO SHIFT LEVER	1	
24	TN46240000D4	LEVER,P.T.OSHAFT	1	
25	22351-080030	PIN, SPRING (8-30)	2	
26	24190-100001	Ball, Steel (5/16)	1	
27	TA00048409A	SPRING, FORK	1	
30	NT46610000H0	REAR AXLE CASE	1	
31	TA00019205A	COLLAR	1	
33	TN46330000B4	BOLT	1	
34	TB28120000C4	DRAIN PLUG	1	
35	24311-000160	O-RING, DYNAMIC (Φ16)	1	
38	TN46380000A4	GREASENIPPLE	1	
42	NT46420000B3	OILINTAKEASS'Y	1	
44	26013-080202	Bolt, Hexa (8-20)	2	
45	FT80370000A4	CAP,INTAKE	1	

FIG C047 4520R(2014~)	LeverAss'yPTOSpeedChange	Year/Month 2020/02

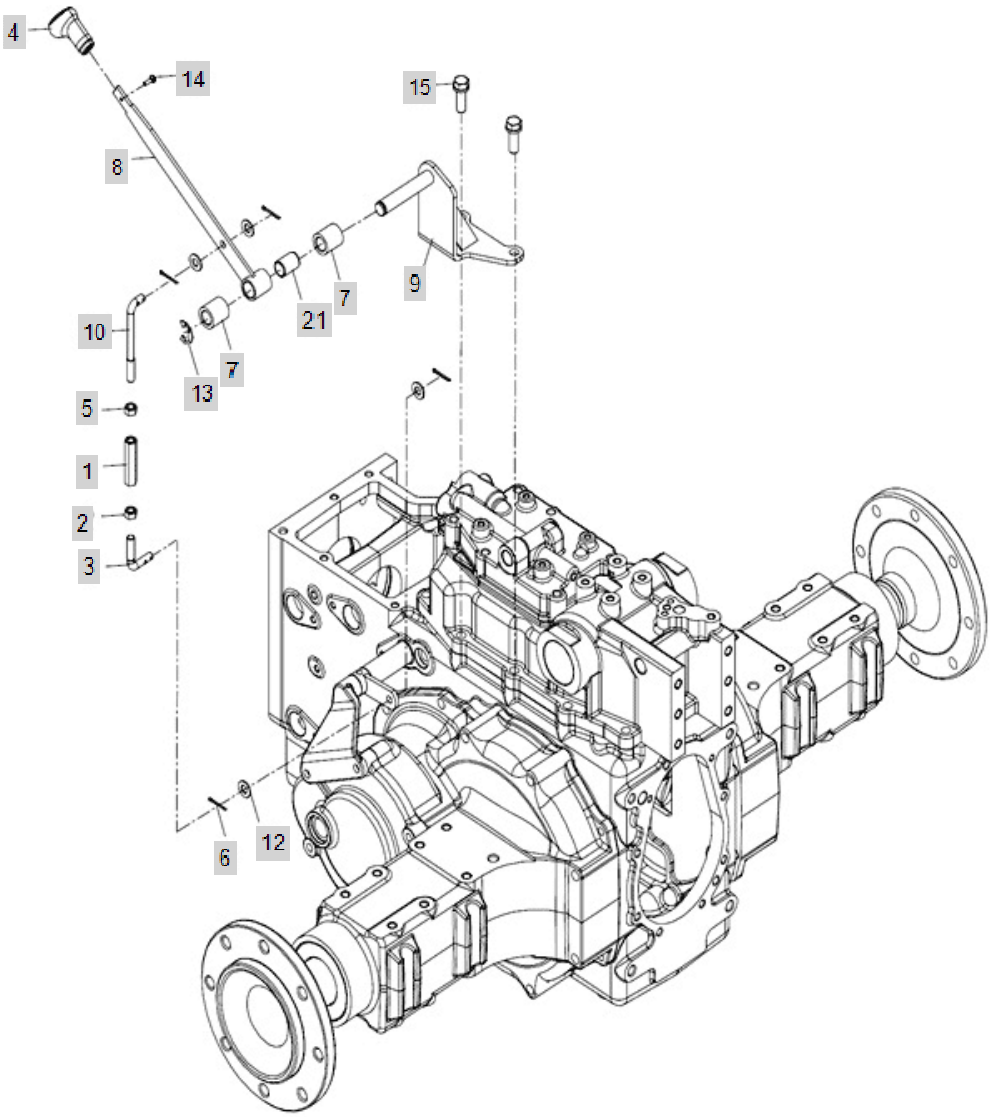

FIG C047 4520R(2014~)	LeverAss'yPTOSpeedChange	Year/Month 2020/02

KeyNo.	Part Number	Part Name	Quantity	Other
1	TT71010000A4	ADJUST	1	
2	TT71020000A4	NUT (LH)	1	
3	TA00003044A	PTO CHANGE ROD B	1	
4	TA00056007A	LEVER, PTO	1	
4-1	TA00015833A	KNOB, PTO SHIFT	1	deleted/삭제
5	26756-100002	FIXEDNUT	1	
6	22417-250250	PIN , COTTER (2-25)	4	
7	TZ47140000A4	COLLAR	2	
8	TA00001122B	LEVER, PTO	1	
9	TA00034059A	PTO 2ND BRACKET ASS'Y	1	
10	NT4720000A2	P.T.O ROD	1	
11	TT70080000A4	BUSH	1	
12	22137-100000	WASHER, PLAIN (Φ 10)	4	
13	22272-000150	RING, CIRCLIP (Φ 15)	1	
14	26023-040162	SCREW	1	
15	26013-120352	SCREW,CAPTIVEWASHERCAP	2	
21	TT70080000A4	BUSH	1	

FIG C048-1 4520R(2014~)	HousingRearAxle	Year/Month 2020/02

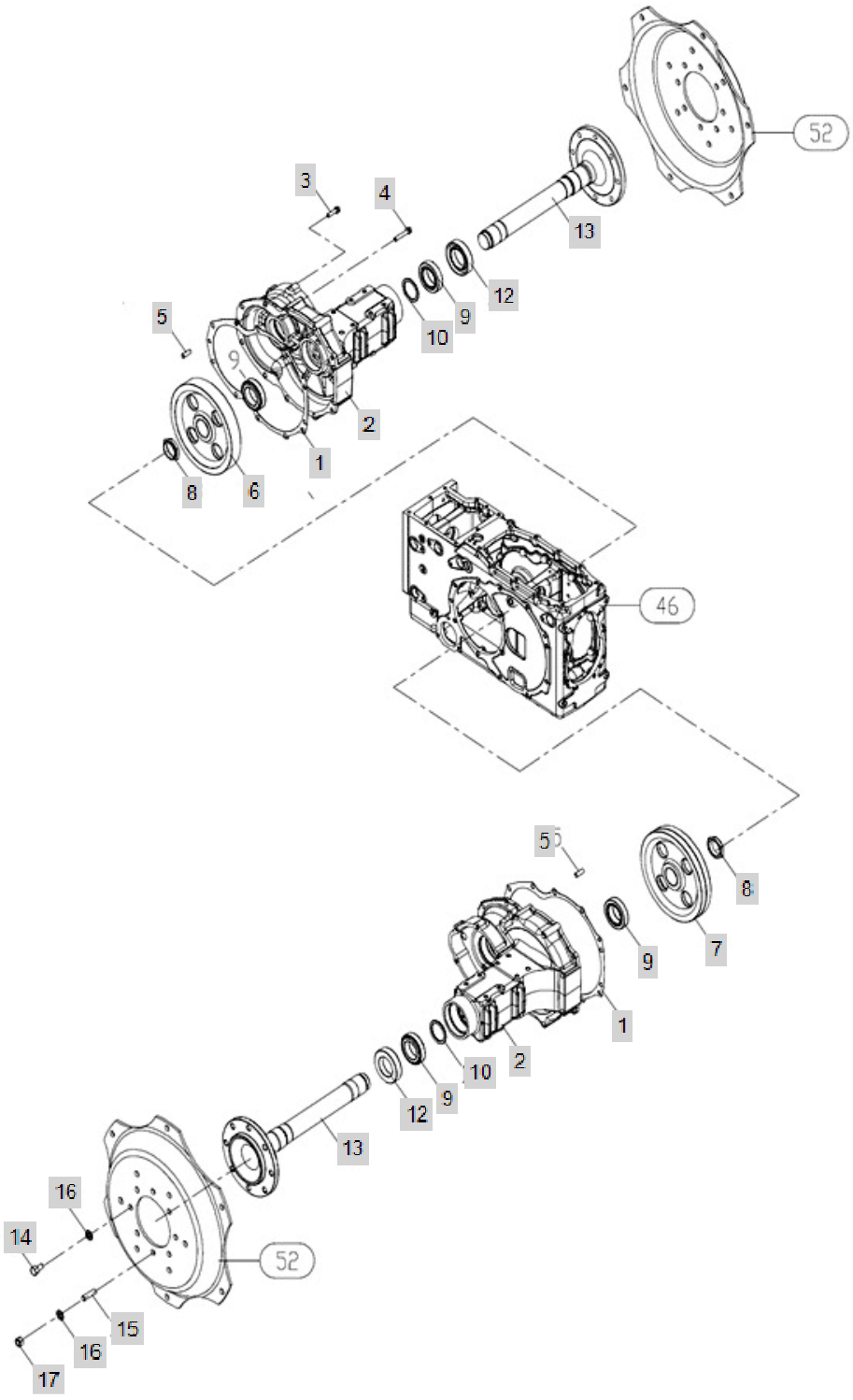

FIG C048-1 4520R(2014~)	HousingRearAxle	Year/Month 2020/02

KeyNo.	Part Number	Part Name	Quantity	Other
1	TZ48160000A3	PACKING, HOUSING	2	
2	TA00032604A	REAR HOUSING	2	
3	26013-120302	HEX BOLT W/WASHER	8	
4	26013-120852	BOLT	12	
5	22312-100180	PIN, DOWEL (10-18)	4	
6	TA00033829A	GEAR R, REAR AXLE	1	
7	TA00032602A	GEAR(L)	1	
8	TA00032594A	ROCK NUT	2	
9	24141-320110	BEARING	4	
10	TA00033424A	SPACER, REAR AXLE	2	
12	TA00033423A	SEAL, OIL (REAR AXLE)	2	
13	TA00032595A	SHAFT	2	
14	TB29440000A4	BOLTM14X35	12	
15	TT85150000A4	Bolt	4	
16	TB29430000A4	WASHER	16	
17	TB29420000A4	NUT M14	4	

FIG C048-2 4520R(2014~)	HOUSING, REAR AXLE	Year/Month 2020/02

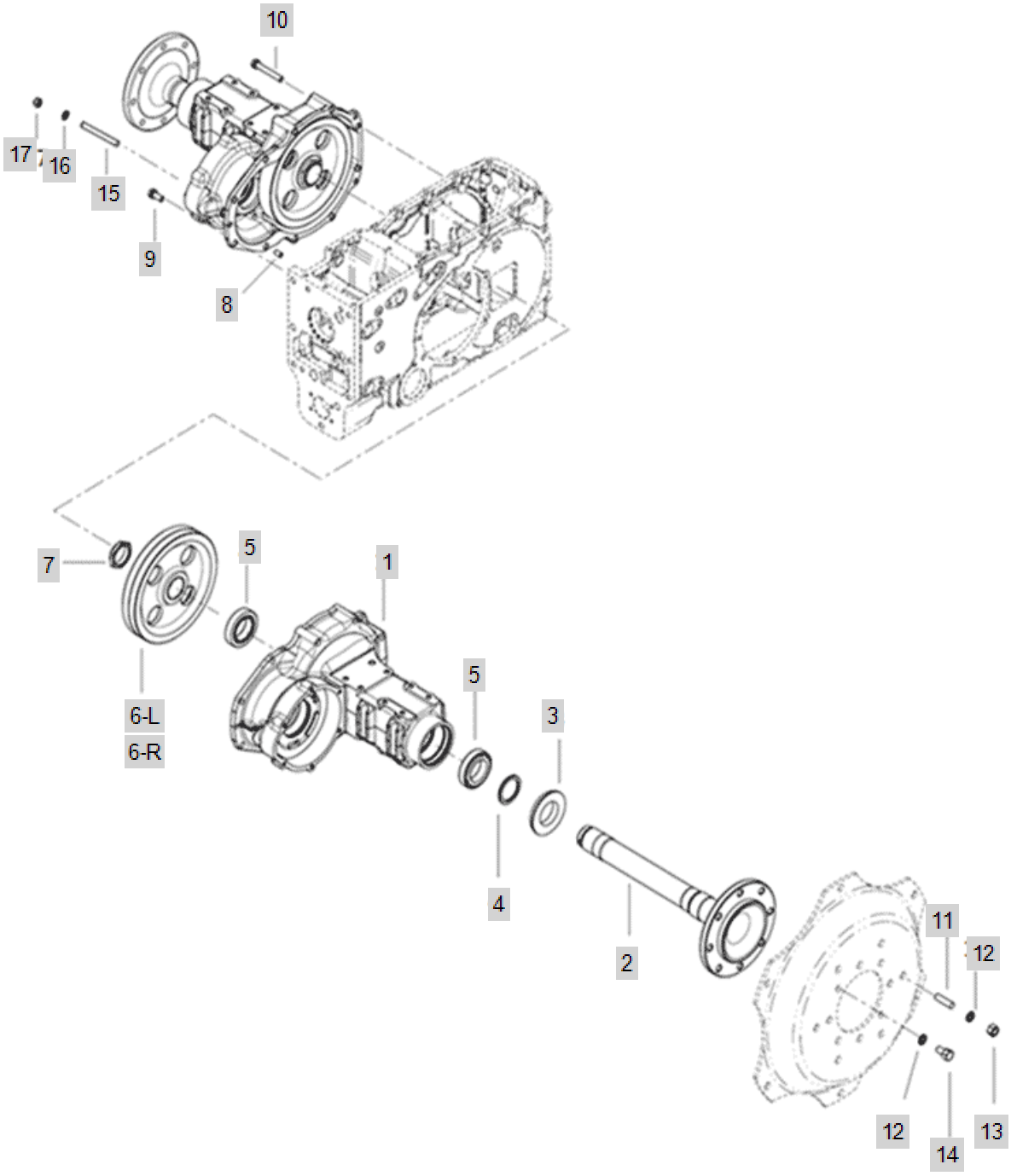

FIG C048-2 4520R(2014~)	HOUSING, REAR AXLE	Year/Month 2020/02

KeyNo.	Part Number	Part Name	Quantity	Other
1	TA00032604E	REAR HOUSING	2	
2	TA00032595B	SHAFT	2	
3	TA00033423A	SEAL, OIL (REAR AXLE)	2	
4	TA00033424A	SPACER, REAR AXLE	2	
5	24141-320110	BEARING	4	
6-L	TA00032602A	GEAR(L)	1	
6-R	TA00033829A	GEAR R, REAR AXLE	1	
7	TA00032594A	ROCK NUT	2	
8	22312-100180	PIN, DOWEL (10-18)	4	
9	26013-120302	HEX BOLT W/WASHER	8	
10	26013-120852	BOLT	8	
11	TT85150000A4	Bolt	4	
12	TB29430000A4	WASHER	16	
13	TB29420000A4	NUT M14	4	
14	TB29440000A4	BOLTM14X35	12	
15	26216-120902		4	
16	22217-120000	WASHER, SPRING (Φ 12)	4	
17	26716-120002	BOLT,CYLINDER HEAD(B)	4	

FIG C049-1 4520R(2014~)	DrivingPartRearAxle	Year/Month 2020/02

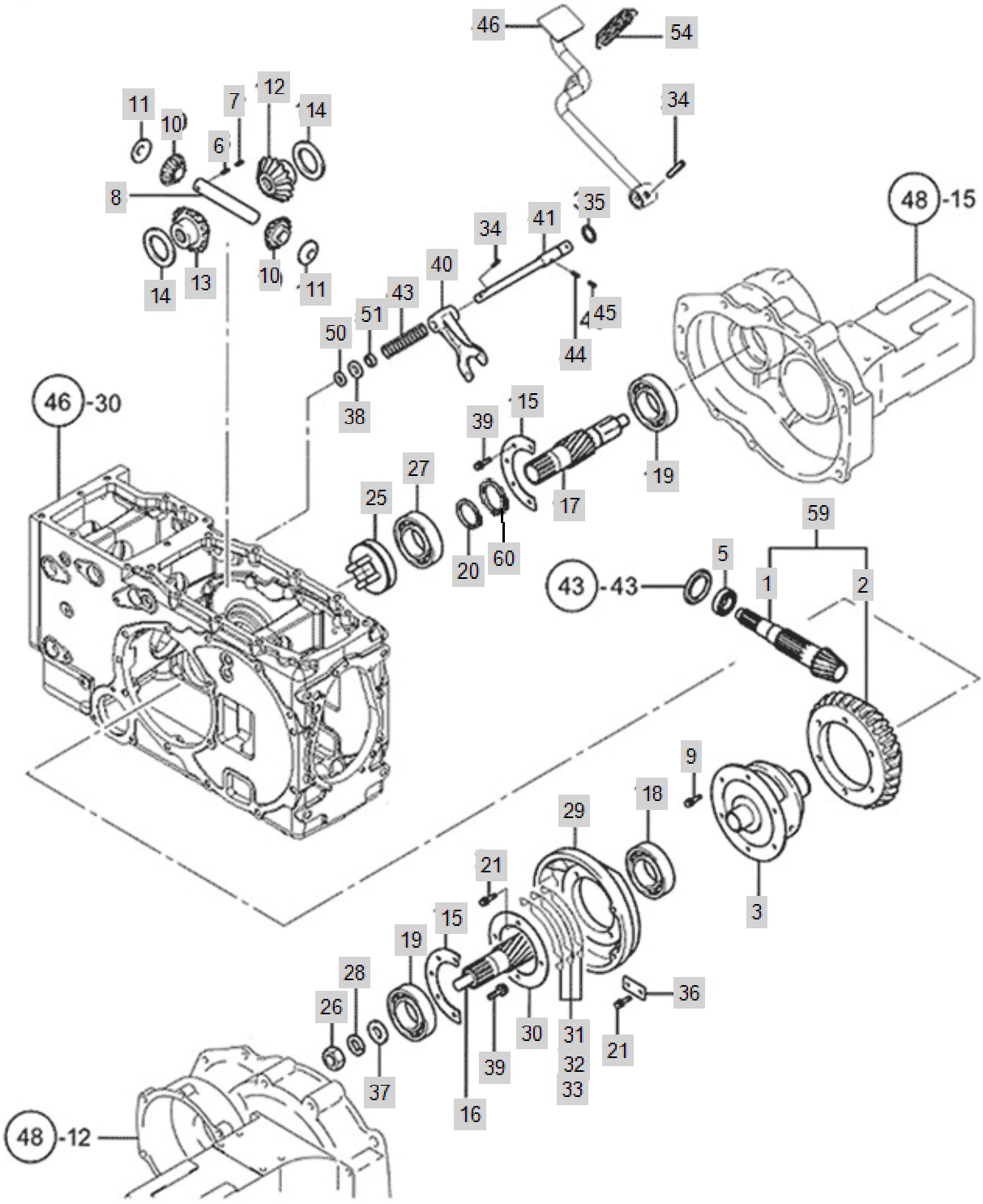

FIG C049-1 4520R(2014~)	DrivingPartRearAxle	Year/Month 2020/02

KeyNo.	Part Number	Part Name	Quantity	Other
1	TN49510000A2	COUNTERSAHFT	1	
2	TN49520000C2	RINGGEAR	1	
3	TN49030000D2	CASE,DIFFERENTIAL -> TA00022799A	1	
5	TT78020000A3	BEARINGNJ307R	1	
6	22312-060360	PIN, DOWEL (6-36)	1	
7	22351-060032	PIN, SPRING (6-32)	1	
8	TF64080000A4	PINIONSHAFT	1	
9	TF64090000A4	BOLT	6	
10	TF64100000A3	PINION	2	
11	TF64110000A4	PINIONLINER	2	
12	TF64120000A3	DIFF.SIDEGEAR(A)	1	
13	TF64130000A3	DIFF.SIDEGEAR(B)	1	
14	TF64140000B4	SIDEGEARLINER	2	
15	TB32150000A4	RETAINER	2	
16	TA00032603A	FINAL PINION(L)	1	
17	TA00032596A	FINAL PINION(R)	1	
18	24101-062114	Bearing, Ball (#6211)	1	
19	TF64190000A4	BALL BEARING (#6308HL1) -> TF64190000A3	2	
20	22242-000500	SNAP RING, SHAFT (Φ50)	1	
21	26013-080202	Bolt, Hexa (8-20)	4	
25	TF64250000B3	THRUST, DIFF-LOCK ASSY	1	
26	26776-220002	NUT	2	
27	24101-060102	BALL BEARING (#6010)	1	
28	22217-220000	WASHER, SPRING (Φ 22)	2	
29	TN49550000B2	CARRIOR	1	
30	TN49590000A4	RETAINER	1	
31	TZ49560000A4	SHIMA	3	
32	TZ49570000A4	SHIMB	3	
33	TZ49580000A4	SHIMC	2	
34	22351-080032	PIN, SPRING (8-32)	2	
35	24311-000160	O-RING, DYNAMIC (Φ16)	1	
36	TB32360000A4	RETAINER	2	
37	TN49370000A4	WASHER	2	
38	TN49380000A4	WASHER	1	
39	26013-080202	Bolt, Hexa (8-20)	10	
40	TN49400000A2	FORK DIFFERENTIAL LOCK	1	
41	TN49410000B3		1	
43	TN49430000A4	SPRING	1	
44	22351-080040	PIN, SPRING (8-40)	1	
45	22351-050040	PIN, SPRING (5-04)	1	
46	TA00001510B	PEDAL, DIFF.LOCK	1	
50	22121-140000	WASHER, PLAIN (Φ 14)	1	
51	24421-152507	Seal, Oil (#15-25-07)	1	
54	TTB1300000A4	SPRING,RETURN	1	
59	TN49500000C9	RING GEAR ASSY	1	

FIG C049-1 4520R(2014~)	DrivingPartRearAxle	Year/Month 2020/02

KeyNo.	Part Number	Part Name	Quantity	Other
60	22252-000800	RING, CIRCLIP (Φ 80)	1	

FIG C049-2 4520R(2014~)	DrivingPartRearAxle(2016.06)	Year/Month 2020/02

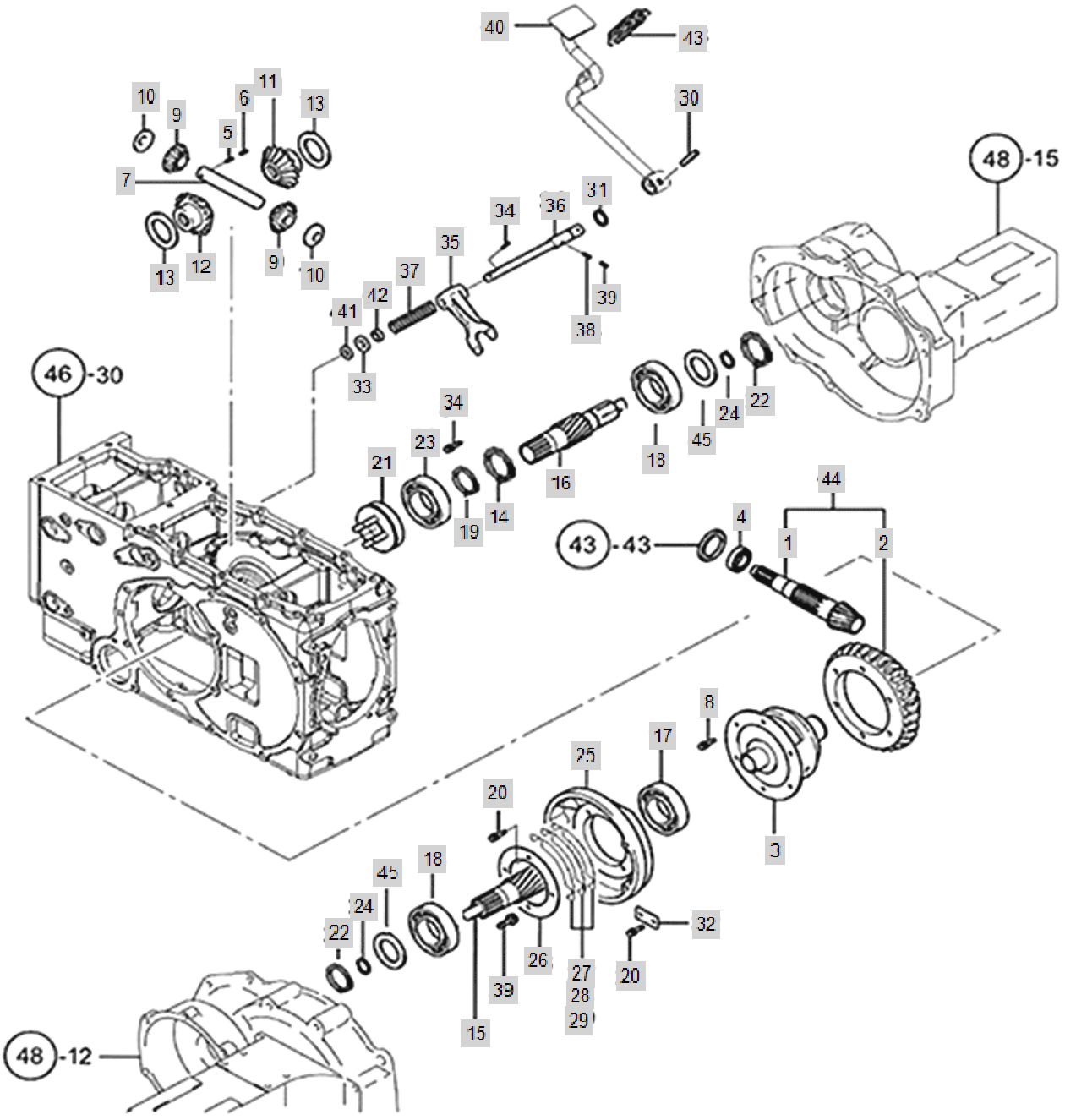

FIG C049-2 4520R(2014~)	DrivingPartRearAxle(2016.06)	Year/Month 2020/02

KeyNo.	Part Number	Part Name	Quantity	Other
1	TN49510000B2	COUNTERSAHFT	1	
2	TN49520000D2	RINGGEAR	1	
3	TN49030000E2	CASE,DIFFERENTIAL	1	
4	TT78020000A3	BEARINGNJ307R	1	
5	22312-060360	PIN, DOWEL (6-36)	1	
6	22351-060032	PIN, SPRING (6-32)	1	
7	TF64080000A4	PINIONSHAFT	1	
8	TF64090000A4	BOLT	6	
9	TF64100000A3	PINION	2	
10	TF64110000A4	PINIONLINER	2	
11	TF64120000A3	DIFF.SIDEGEAR(A)	1	
12	TF64130000A3	DIFF.SIDEGEAR(B)	1	
13	TF64140000B4	SIDEGEARLINER	2	
14	22252-000800	RING, CIRCLIP (Φ 80)	1	
15	TA00032603E	FINAL PINION(L)	1	
16	TA00032596E	FINAL PINION(R)	1	
17	24101-062114	Bearing, Ball (#6211)	1	
18	TF64190000A4	BALL BEARING (#6308HL1) -> TF64190000A3	2	
19	22242-000500	SNAP RING, SHAFT (Φ50)	1	
20	26013-080202	Bolt, Hexa (8-20)	4	
21	TF64250000B3	THRUST, DIFF-LOCK ASSY	1	
22	22252-000900	RING, CIRCLIP (Φ 90)	2	
23	24101-060104	Bearing, Ball (#6010)	1	
24	22242-000400	SNAP RING, SHAFT (Φ 40)	2	
25	TN49550000B2	CARRIOR	1	
26	TN49590000A4	RETAINER	1	
27	TZ49560000A4	SHIMA	3	
28	TZ49570000A4	SHIMB	3	
29	TZ49580000A4	SHIMC	2	
30	22351-080032	PIN, SPRING (8-32)	2	
31	24311-000160	O-RING, DYNAMIC (Φ16)	1	
32	TB32360000A4	RETAINER	2	
33	TN49380000A4	WASHER	1	
34	26013-080202	Bolt, Hexa (8-20)	10	
35	TN49400000B2	FORKDIFFERENTIALLOCK	1	
36	TN49410000B3		1	
37	TN49430000A4	SPRING	1	
38	22351-080040	PIN, SPRING (8-40)	1	
39	22351-050040	PIN, SPRING (5-04)	1	
40	TA00001510B	PEDAL, DIFF.LOCK	1	
41	22121-140000	WASHER, PLAIN (Φ 14)	1	
42	24421-152507	Seal, Oil (#15-25-07)	1	
43	TTB1300000A4	SPRING,RETURN	1	
44	TN49500000C9	RING GEAR ASSY	1	
45	TA00044074A	SPACER (50x40x3T)	2	

FIG C050B-1 4520R(2014~)	Brake	Year/Month 2020/02

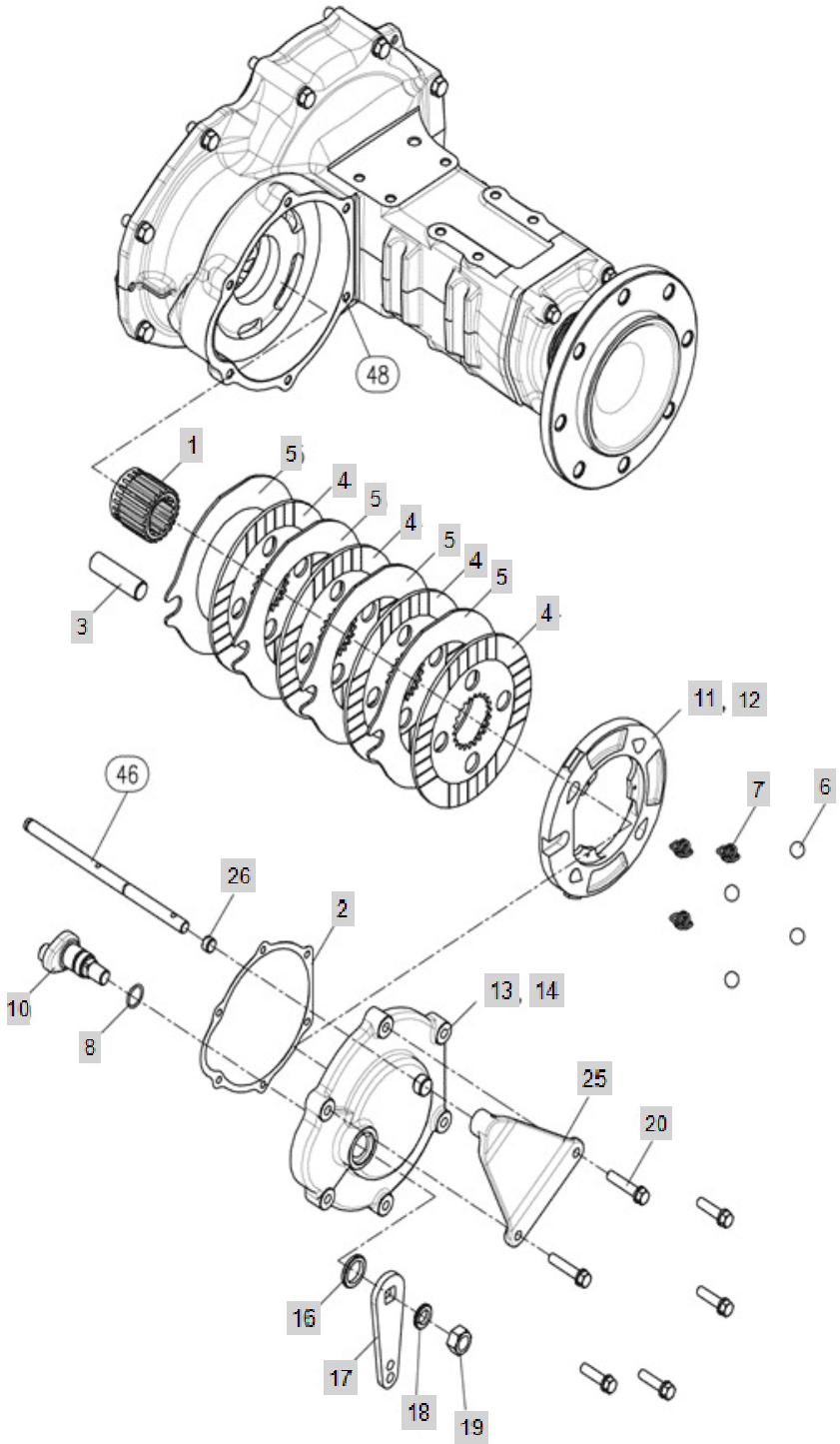

FIG C050B-1 4520R(2014~)	Brake	Year/Month 2020/02

KeyNo.	Part Number	Part Name	Quantity	Other
1	TN50010000A3	HUBSPLINE	2	
2	TZ50020000A4	PACKING	2	
3	TN50030000A4	SHAFT	2	
4	TN50040000A2	FRICTIONPLATE	8	
5	TN50050000A2	PLATE	8	
6	24190-200001	Ball, Steel	8	
7	TN50070000A4	SPRING	6	
8	24311-000210	O-RING, DYNAMIC (Φ21)	2	
10	TN50100000B3	CAP	2	
11	TN50110000B2	CAM PLATE(L)	1	
12	TN50120000B2	CAM PLATE (R)	1	
13	TN50130000A1	COVER(L),BRAKE	1	
14	TN50140000A1	COVER(R),BRAKE	1	
15	26013-100402	Bolt, Hexa (10-40)	10	
16	24421-253505	Seal, Oil (#25-35-05)	2	
17	TN50170000A4	LEVER	2	
18	22217-160000	WASHER, SPRING (Φ 16)	2	
19	26736-160002	HEXNUT	2	
20	26013-100502	BOLT,W/SW	2	
25	TN50250000C3	SHAFTHOLDER	1	
26	TT70090000A4	BUSH	1	

FIG C050T-2 4520R(2014~)	Brake	Year/Month 2020/02

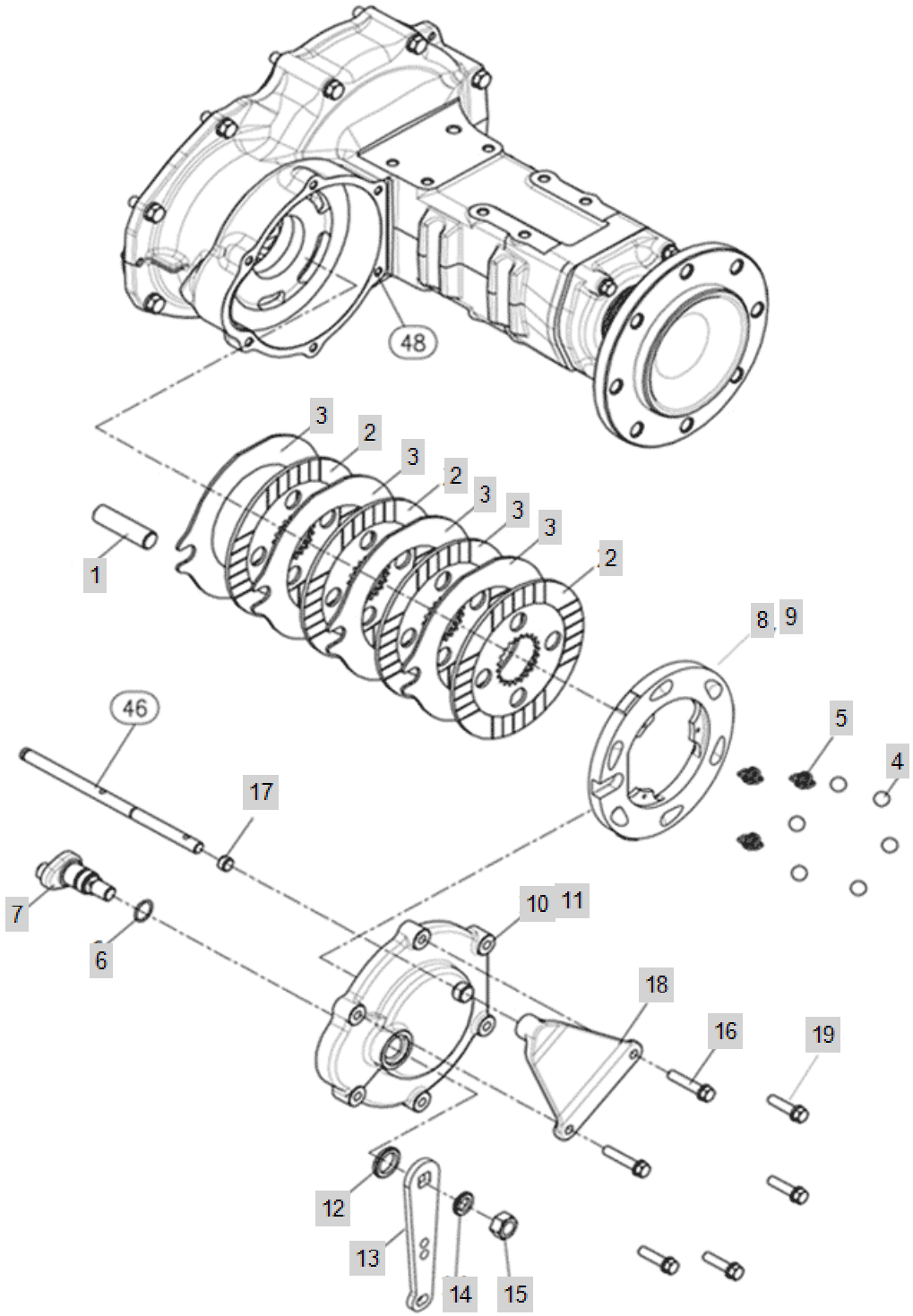

FIG C050T-2 4520R(2014~)	Brake	Year/Month 2020/02

KeyNo.	Part Number	Part Name	Quantity	Other
1	TN50030000A4	SHAFT	2	
2	TA00033823B	DISC,FRICTION	8	
3	TN50050000A2	PLATE	8	
4	24190-200001	Ball, Steel	12	
5	TN50070000A4	SPRING	6	
6	24311-000210	O-RING, DYNAMIC (Φ21)	2	
7	TN50100000B3	CAP	2	
8	TA00046783A	CAM PLATE L	1	
9	TA00046784A	CAM PLATE R	1	
10	TA00046785A	COVER L,BRAKE	1	
11	TA00046786A	COVER R, BRAKE	1	
12	24421-253505	Seal, Oil (#25-35-05)	2	
13	TA00036336A	BRAKE LEVER	2	
14	22217-160000	WASHER, SPRING (Φ 16)	2	
15	26736-160002	HEXNUT	2	
16	26013-100502	BOLT,W/SW	2	
17	TT70090000A4	BUSH	1	
18	TN50250000C3	SHAFTHOLDER	1	
19	26013-100402	Bolt, Hexa (10-40)	10	

FIG C053-1 4520R(2014~)	BrakeClutchPedal	Year/Month 2020/02

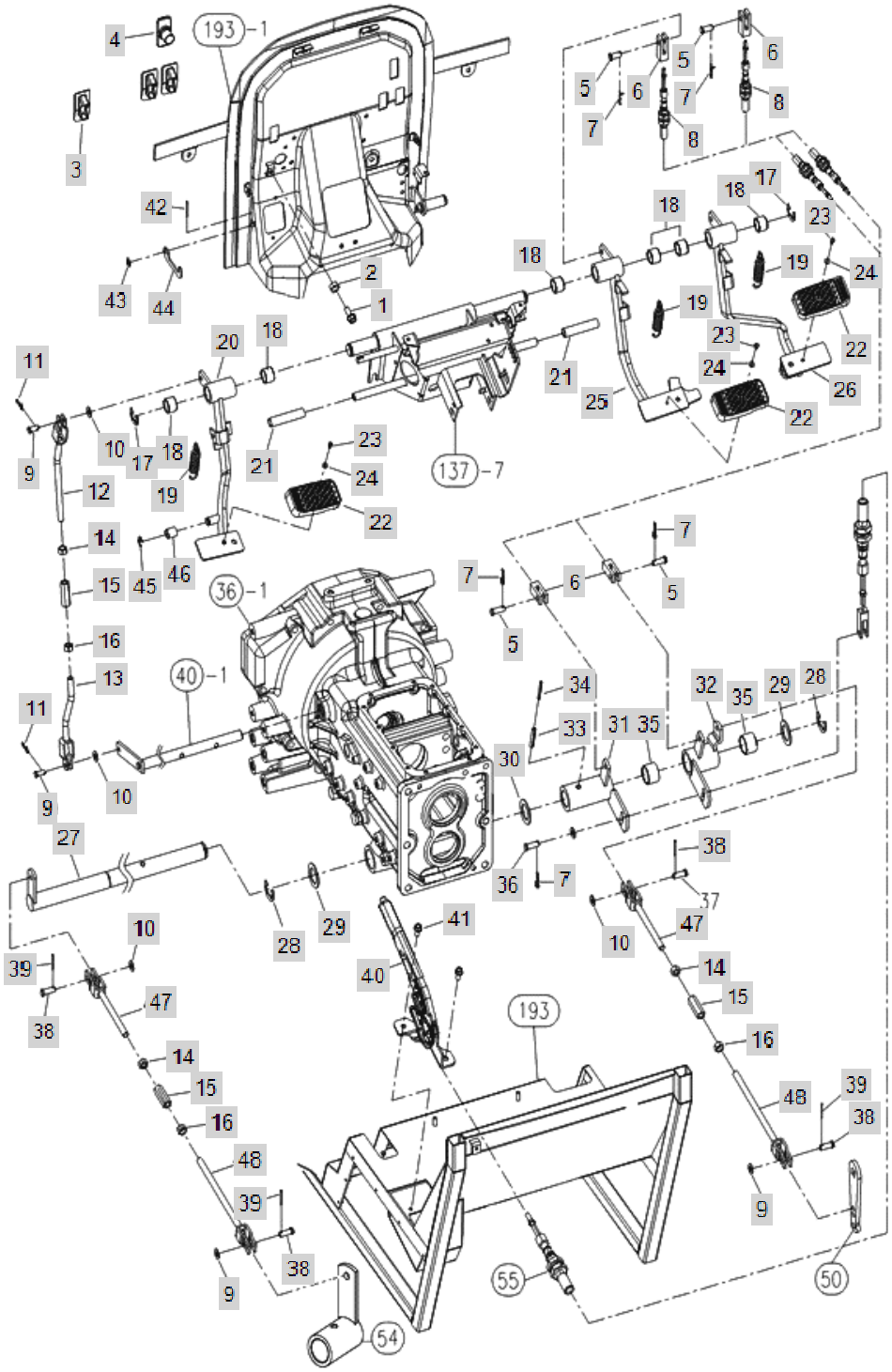

FIG C053-1 4520R(2014~)	BrakeClutchPedal	Year/Month 2020/02

KeyNo.	Part Number	Part Name	Quantity	Other
1	26116-080252	BOLT7T(8X25)	1	
2	26716-080002	NUT,HEX (D8)	1	
3	TCB6100000A4	BOOTS, PEDAL	3	
4	TCD5110000A4	qq	1	
5	22487-100200	PIN, HEAD (10-20)	4	
6	TW43030000A4	SUTTLE CLEVIS A	4	
7	RR51230000A4	SNAP PIN	5	
8	TA00002285A	BRAKE CABLE	2	
9	TT83010000A4	TURN BUCKLE, 10X70	2	
10	22137-100000	WASHER, PLAIN (Φ 10)	6	
11	RR64050000A4	Pin, Come-Off Snap (Φ8)	2	
12	TA00017497A	CLUTCH ROD UPPER	1	
13	TA00017498B	CLUTCH ROD LOWER	1	
14	TT67040000A4	NUT.LH	3	
15	TT67010000A4	TURN BUCKLE	3	
16	26716-120002	BOLT,CYLINDER HEAD(B)	3	
17	22272-000190	RING, CIRCLIP (Φ 19)	2	
18	TC73010200A4	BUSH25*28*20	6	
19	TC73090000A4	RETURN SPRING	3	
20	TA00002795B	CLUTCH PEDAL ASS'Y	1	
21	TCB6300000A3	PIPE	2	
22	TC73050000A3	PEDALHEADCOVER	3	
23	TC73030000A4	RIVET(PEDALHEAD)	3	
24	TC73040000A4	WASHER(REVET)	3	
25	TA00002785B	BRAKE PEDAL L ASS'Y	1	
26	TA00002784C	BRAKE PEDAL R ASS'Y	1	
27	TA00035982A	BRAKE SHAFT	1	
28	22272-000240	RING, CIRCLIP (Φ 24)	2	
29	TB35120000B4	WASHER B	2	
30	TB35110000B4	WASHER A	1	
31	TA00017352B	BRAKE LINE(L)REAR	1	
32	TA00017353B	BRAKE LINE(R)REAR	1	
33	22351-080050	PIN, SPRING (8-50)	1	
34	22351-050050	PIN, SPRING (5-05)	1	
35	TB26240000A4	BUSH	2	
36	22487-100260	PIN, HEAD (10-26)	1	
38	TT41090000A4	PIN10X23	4	
39	22417-200300	PIN , COTTER (2-30)	4	
40	TA00001403A	PARKING BRAKE	1	
41	26106-080202	SQR FLANGE BOLT	2	
42	22417-250300	PIN , COTTER (2-30)	1	
43	22137-080000	WASHER, PLAIN (Φ 08)	1	
44	TA00018293A	ROCK(CLUTCH PEDAL)	1	
45	22272-000120	RING, CIRCLIP (Φ 12)	1	
46	TA00002799A	PIPE	1	

FIG C053-1 4520R(2014~)	BrakeClutchPedal	Year/Month 2020/02

KeyNo.	Part Number	Part Name	Quantity	Other
47	TA00036183A	ROD ASSY L	2	
48	NT53250000B4		2	

FIG C053-2 4520R(2014~)	BrakeClutchPedal	Year/Month 2020/02

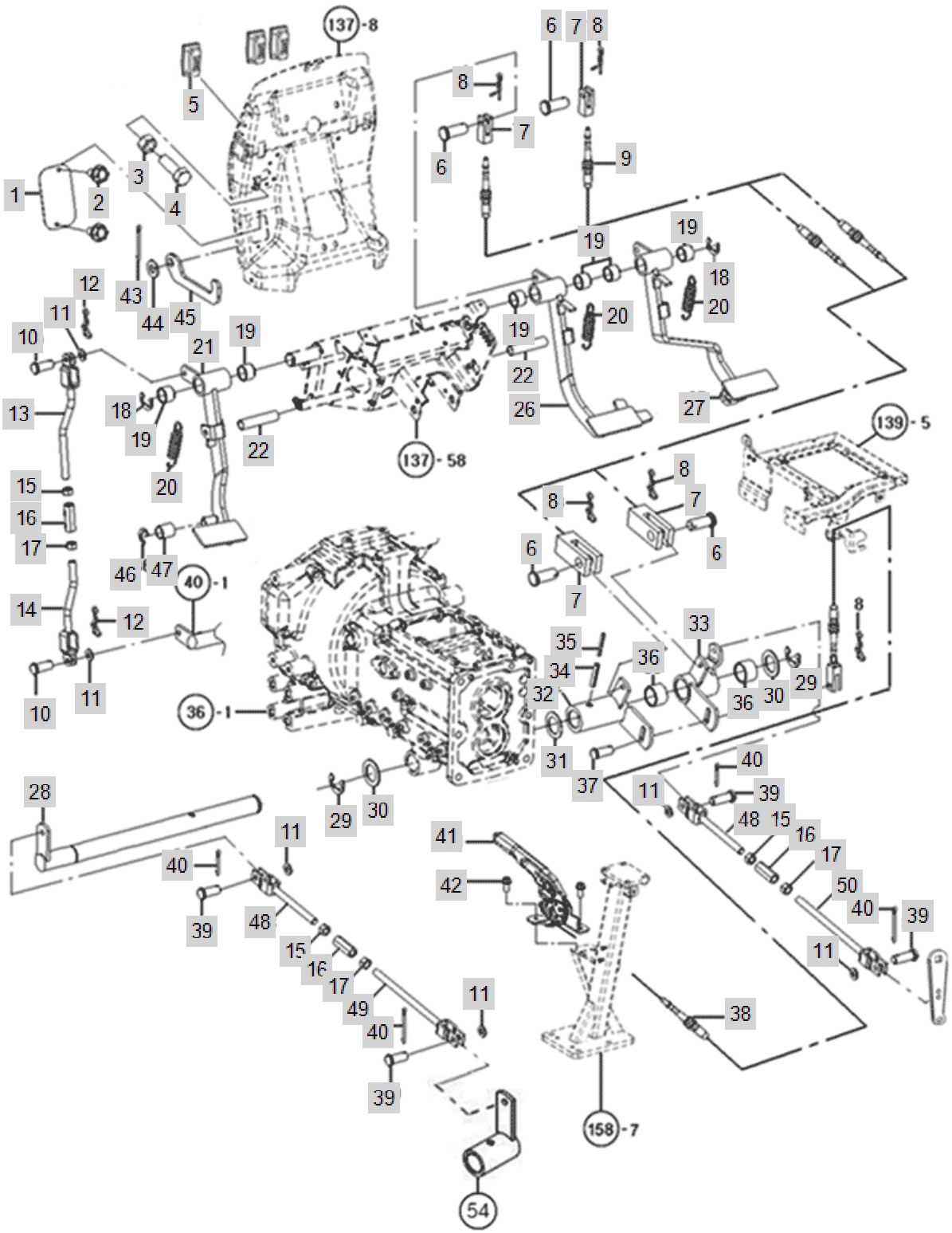

FIG C053-2 4520R(2014~)	BrakeClutchPedal	Year/Month 2020/02

KeyNo.	Part Number	Part Name	Quantity	Other
1	TA00017501A	COVER	1	
2	26106-060122	HEX BOLT (6-12)	2	
3	26716-080002	NUT,HEX (D8)	1	
4	26116-080252	BOLT7T(8X25)	1	
5	TA00047203A	BRACKET B, WIRE	3	
6	22487-100200	PIN, HEAD (10-20)	4	
7	TW43030000A4	SUTTLE CLEVIS A	4	
8	RR51230000A4	SNAP PIN	5	
9	TA00002285A	BRAKE CABLE	2	
10	TT83010000A4	TURN BUCKLE, 10X70	2	
11	22137-100000	WASHER, PLAIN (Φ 10)	6	
12	RR64050000C4	PIN 8, COME-OFF SNAP	2	
13	TA00017497A	CLUTCH ROD UPPER	1	
14	TA00017498B	CLUTCH ROD LOWER	1	
15	TT67040000A4	NUT.LH	3	
16	TT67010000A4	TURN BUCKLE	3	
17	26716-120002	BOLT,CYLINDER HEAD(B)	3	
18	22272-000190	RING, CIRCLIP (Φ 19)	2	
19	TC73010200A4	BUSH25*28*20	6	
20	TC73090000A4	RETURN SPRING	3	
21	TA00053349A	CLUTCH PEDAL	1	
21-1	TA00034537C	CLUTCH PEDAL ASS'Y	1	delete
22	TCB6300000A3	PIPE	2	
26	TA00048447A	PEDAL ASSY, BRAKE	1	
27	TA00053351A	PEDAL ASS'Y(RH), BRAKE	1	
28	TA00035982A	BRAKE SHAFT	1	
29	22272-000240	RING, CIRCLIP (Φ 24)	2	
30	TB35120000B4	WASHER B	2	
31	TB35110000B4	WASHER A	1	
32	TA00017352B	BRAKE LINE(L)REAR	1	
33	TA00017353C	BRAKE LINE(R)REAR	1	
34	22351-080050	PIN, SPRING (8-50)	1	
35	22351-050050	PIN, SPRING (5-05)	1	
36	TB26240000A4	BUSH	2	
37	22487-100260	PIN, HEAD (10-26)	1	
38	TA00017354D	CABLE, PARKING BRAKE	1	
39	TT41090000A4	PIN10X23	4	
40	22417-200300	PIN , COTTER (2-30)	4	
41	TA00001403A	PARKING BRAKE	1	
42	26106-080202	SQR FLANGE BOLT	2	
43	22417-250300	PIN , COTTER (2-30)	1	
44	22137-080000	WASHER, PLAIN (Φ 08)	1	
45	TA00018293B	BRAKE ROD	1	
46	22272-000120	RING, CIRCLIP (Φ 12)	1	
47	TA00002799A	PIPE	1	

FIG C053-2 4520R(2014~)	BrakeClutchPedal	Year/Month 2020/02

KeyNo.	Part Number	Part Name	Quantity	Other
48	TA00036183A	ROD ASSY L	2	
49	NT53250000C4		1	
50	NT53240000A4	ROD[L]	1	

FIG C054 4520R(2014~)	SupportBrake	Year/Month 2020/02

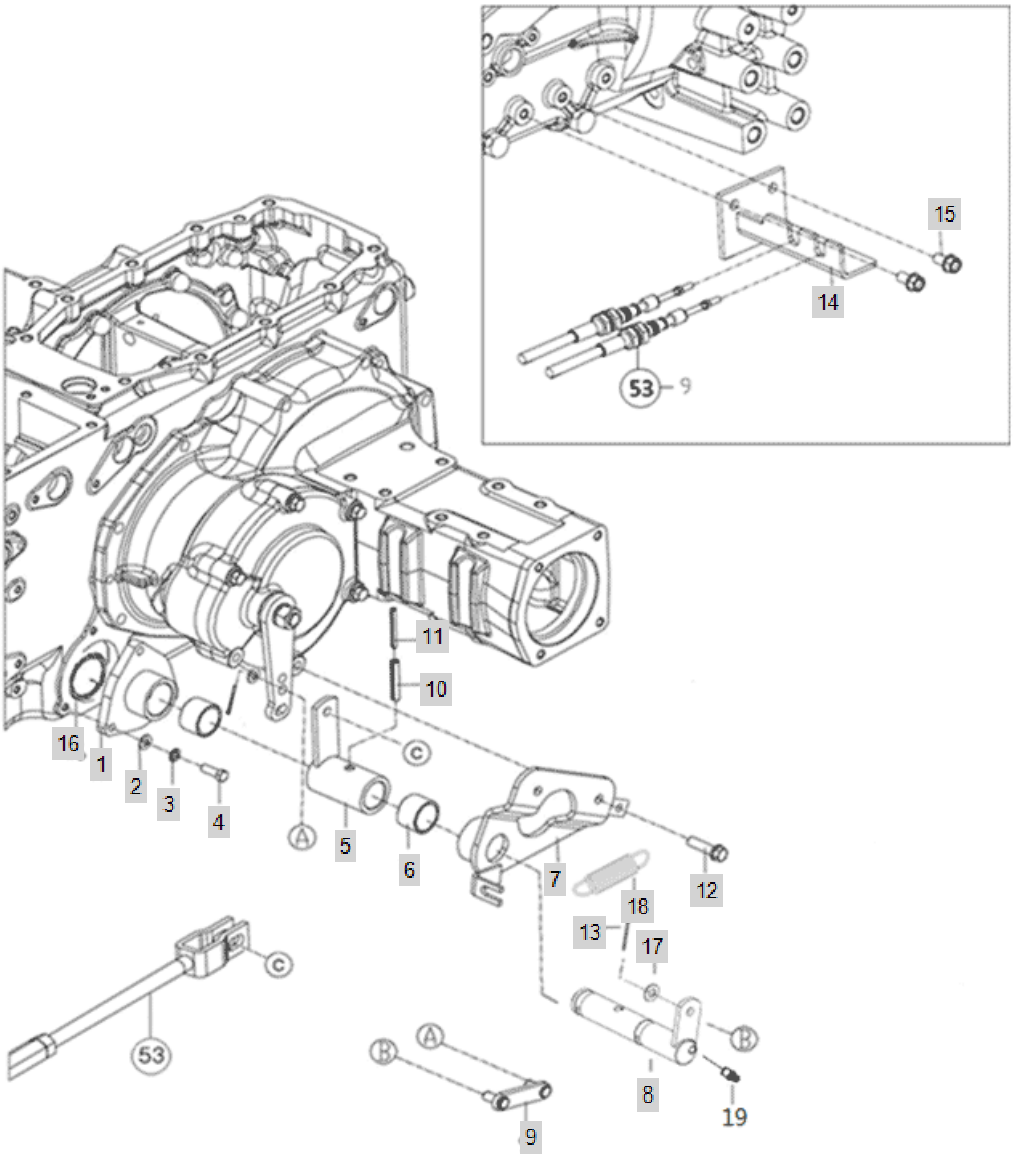

FIG C054 4520R(2014~)	SupportBrake	Year/Month 2020/02

KeyNo.	Part Number	Part Name	Quantity	Other
1	TA00035983A	BRAKE SUPPORT B	1	
2	22137-080000	WASHER, PLAIN (Φ 08)	3	
3	22217-080000	WASHER, SPRING (Φ 08)	3	
4	26116-080252	BOLT7T(8X25)	3	
5	TA00035988A	BRAKE ARM	1	
6	TB26240000A4	BUSH	2	
7	TA00035977A	BRAKE SUPPORT ASSY	1	
8	TA00035985A	BRAKE SHAFT A	1	
9	TA00035965A	BRAKE ROD	1	
10	22351-080050	PIN, SPRING (8-50)	1	
11	22351-050050	PIN, SPRING (5-05)	1	
12	26013-100402	Bolt, Hexa (10-40)	2	
13	22417-200300	PIN , COTTER (2-30)	2	
14	TA00034254A	SUPPORT ASS'Y (R)	1	
15	26106-100202	HEX BOLT, (10-20)	2	
16	24321-000850	ORING(G85)	1	
17	22137-100000	WASHER, PLAIN (Φ 10)	2	
18	FEB0150000B	SPRING	1	
19	24764-020000	GREASENIPPLE	1	

FIG C055 4520R(2014~)	ParkingBrake	Year/Month 2020/02

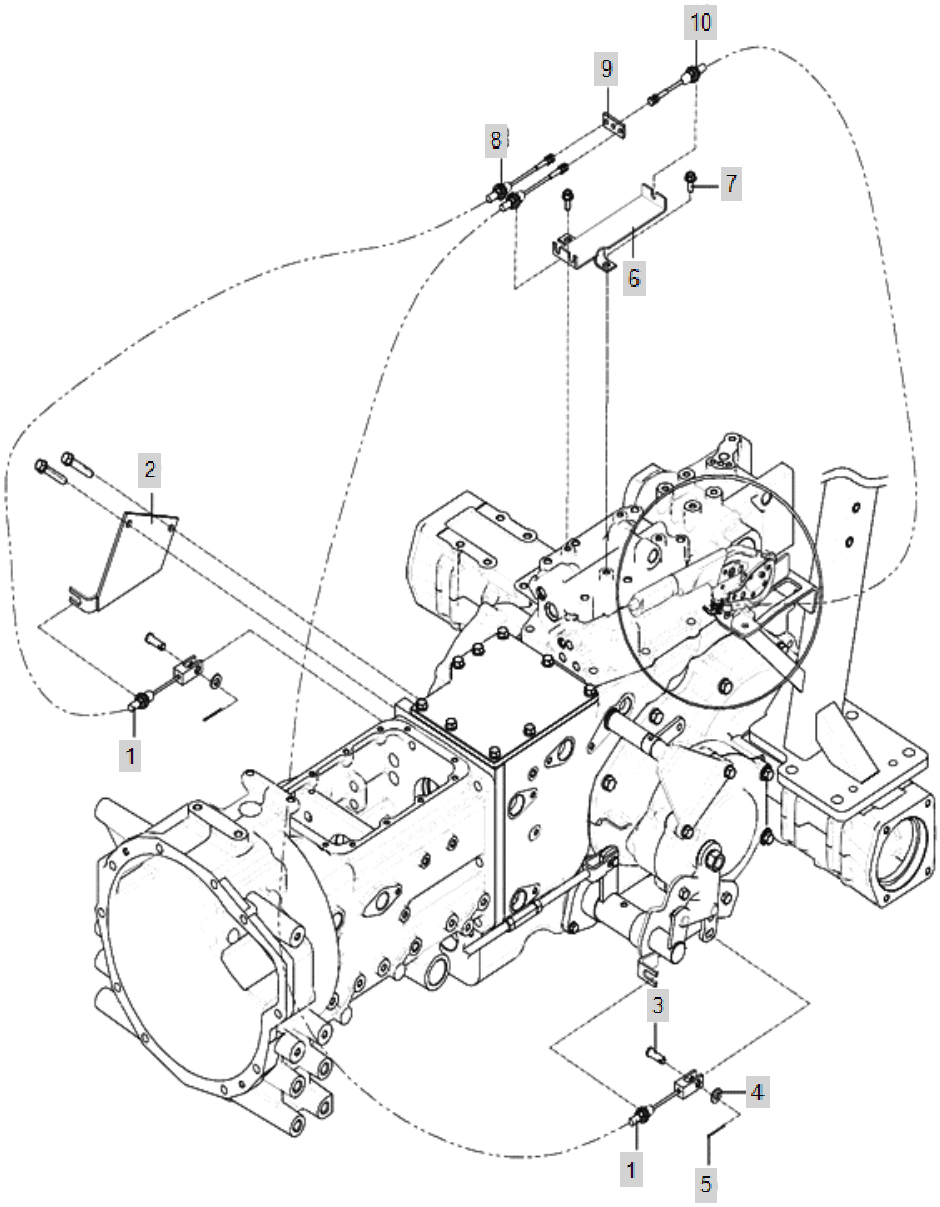

FIG C055 4520R(2014~)	ParkingBrake	Year/Month 2020/02

KeyNo.	Part Number	Part Name	Quantity	Other
1	TA00015989A	CLEVIS	2	
2	TA00036935A	BRACKET, BRAKE	1	
3	TT41090000A4	PIN10X23	2	
4	22137-100000	WASHER, PLAIN (Φ 10)	2	
5	22417-200300	PIN , COTTER (2-30)	2	
6	TA00036087A	PARKING BRAKE ASS'Y	1	
7	26106-080202	SQR FLANGE BOLT	2	
8	TA00028886A	CABLE,PARKING BRAKE(LR)-> TA00028886B	2	
9	TA00028944A	BRAKET	1	
10	TA00028887A	CABLE PARKING BRAKE(MAIN)->TA00028887B	1	

FIG C067 4520R(2014~)	LeverMainShift	Year/Month 2020/02

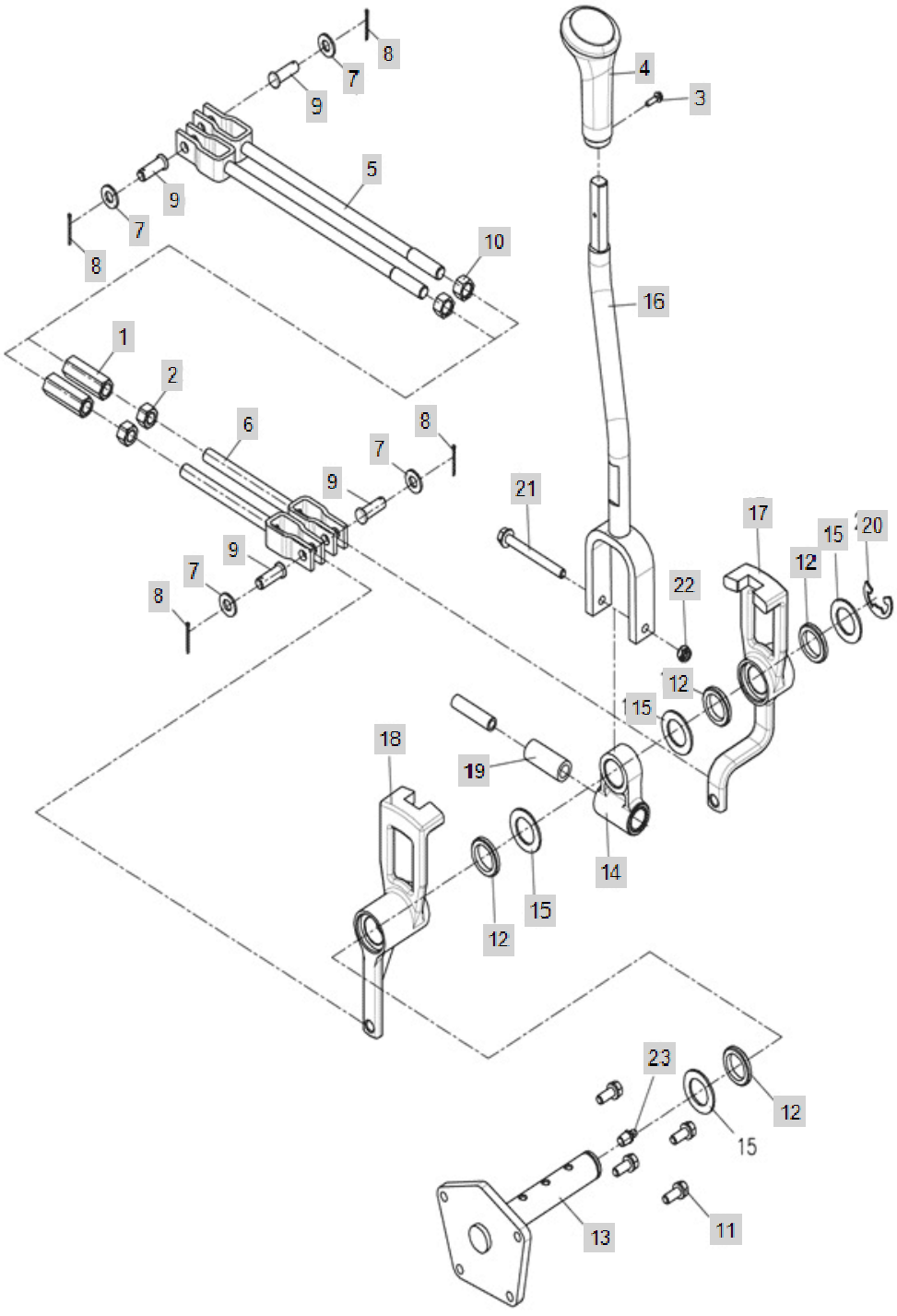

FIG C067 4520R(2014~)	LeverMainShift	Year/Month 2020/02

KeyNo.	Part Number	Part Name	Quantity	Other
1	TT67010000A4	TURN BUCKLE	2	
2	TT67040000A4	NUT.LH	2	
3	26023-040162	SCREW	1	
4	TA00056009A	MAIN KNOB	1	
4-1	TA00016326B	KNOB, MAIN SHIFT	1	
5	TN53250000A4	ROD(R)	2	
6	TA00018709A	LEFT LOAD	2	
7	22137-100000	WASHER, PLAIN (Φ 10)	4	
8	22417-200250	PIN , COTTER (2-25)	4	
9	22487-100240	PIN, HEAD (10-24)	4	
10	26716-120002	BOLT,CYLINDER HEAD(B)	2	
11	26013-080252	Bolt, Hexa (8-25)	4	
12	24430-253505	Seal, Oil (#25-35-05)	4	
13	NT67610000A2	SHAFT,MAINSHIFTLEVER	1	
14	NT67620000A4	HOLDER,MAINSHIFTLEVER	1	
15	NT67630000A4	WASHER	4	
16	TA00017375C	LEVER, MAIN SHIFT	1	
17	NT67650000B2	ARM-B	1	
18	NT67660000B2	ARM-A	1	
19	FT67670000A4	RUBBERSPRING	1	
20	22272-000190	RING, CIRCLIP (Φ 19)	1	
21	26106-080752	SCREW,HEXFLANGEHEADCAP	1	
22	26347-080002	Unut	1	
23	24764-020000	GREASENIPPLE	1	

FIG C099B-1 4520R(2014~)	HYD_Pump	Year/Month 2020/02

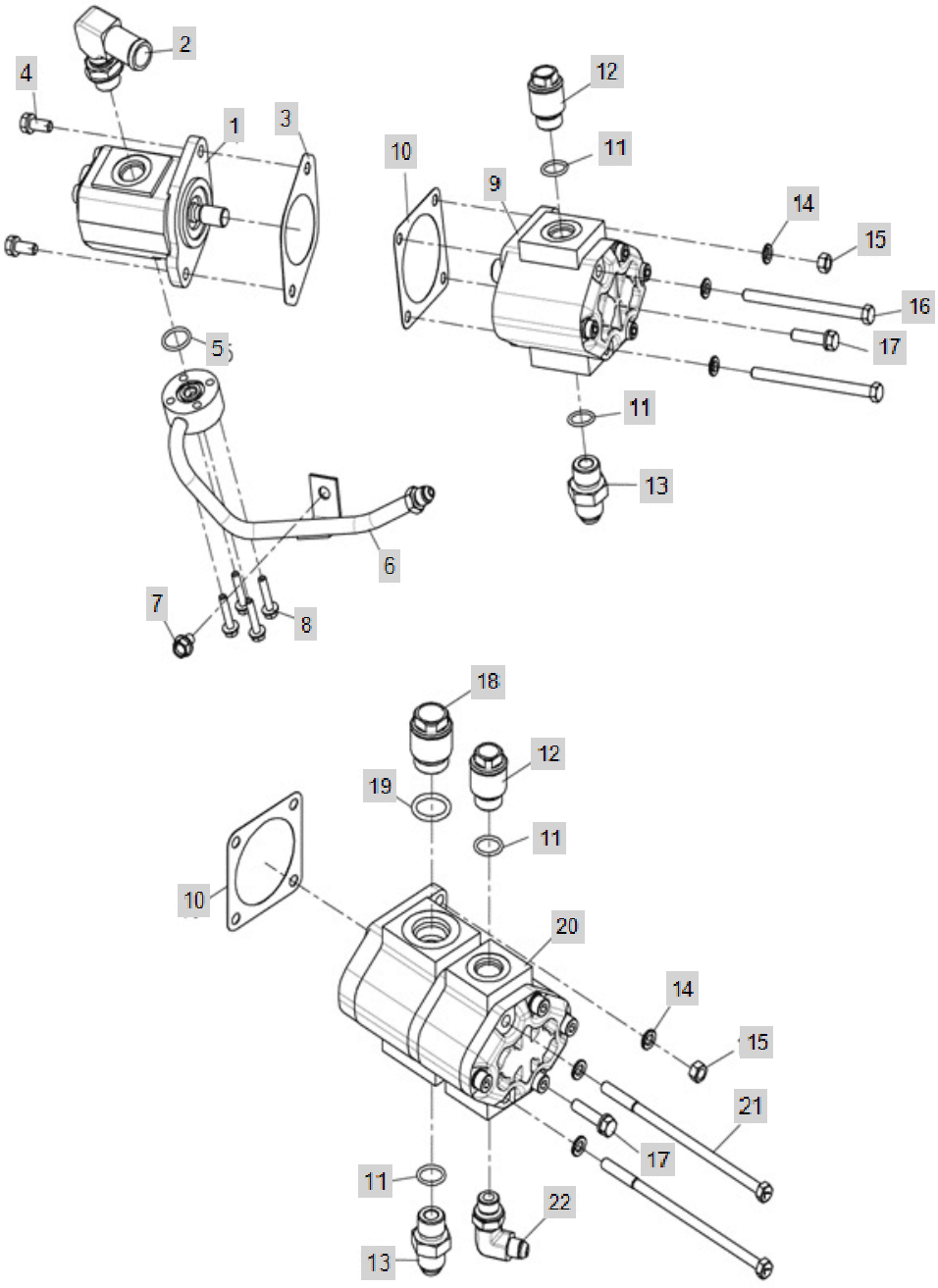

FIG C099B-1 4520R(2014~)	HYD_Pump	Year/Month 2020/02

KeyNo.	Part Number	Part Name	Quantity	Other
1	NT34690000A3	HYD,PUMP7CC	1	
2	TRC9140000A3	ELBOW	1	
3	TZG1700000A4	PACKING	1	
4	26013-080202	Bolt, Hexa (8-20)	2	
5	24311-000200	O-RING, DYNAMIC (Φ20)	1	
6	TA00000962B	PIPE ASS'Y, P.S.T	1	
7	26106-080122	Bolt, Hexa (8-12)	1	
8	26106-060302	Bolt, Hexa (6-30)	4	
9	TA00001404A	HYD PUMP 13CC	1	
10	HH02080000A4	PACKING,HYD.PUMP	1	
11	24311-000180	O-RING, DYNAMIC (Φ18)	2	
12	TCC9040000A4	JOINT M22	1	
13	CVE4020000A4	NIPPLE	1	
14	22217-080000	WASHER, SPRING (Φ 08)	3	
15	26716-080002	NUT,HEX (D8)	1	
16	26116-081152	HEX BOLT	2	
17	26013-080352	SCREW,CAPTIVEWASHERCAP	1	
18	FBB4500000A4	JOINT 3/4	1	
19	24311-000240	O-RING, DYNAMIC (Φ24)	1	
20	TA00025513A	HYD PUMP	1	
21	FL99120000B	BOLT	2	
22	NT34620000A4	ELBOW	1	

FIG C099B-2 4520R(2014~)	HYD_Pump	Year/Month 2020/02

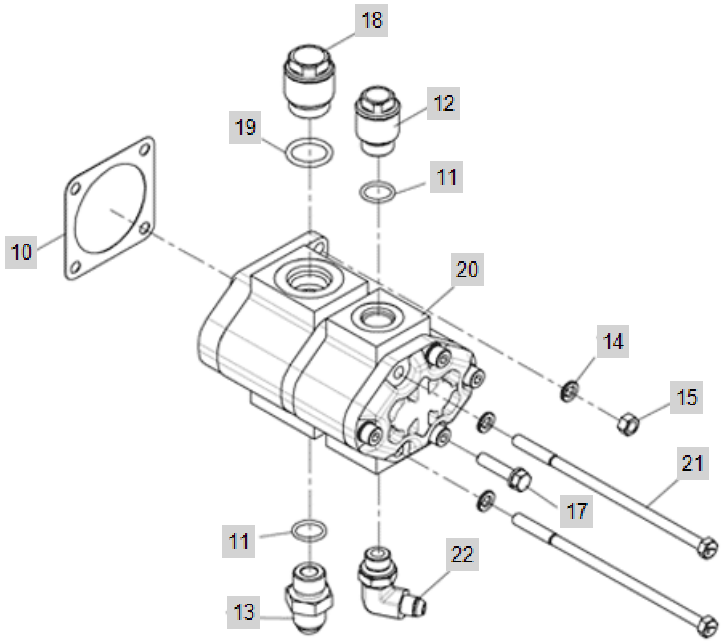

FIG C099B-2 4520R(2014~)	HYD_Pump	Year/Month 2020/02

KeyNo.	Part Number	Part Name	Quantity	Other
1	NT34690000A3	HYD,PUMP7CC	1	
2	TRC9140000A3	ELBOW	1	
3	TZG1700000A4	PACKING	1	
4	26013-080202	Bolt, Hexa (8-20)	2	
5	24311-000200	O-RING, DYNAMIC (Φ20)	1	
6	TA00000962B	PIPE ASS'Y, P.S.T	1	
7	26106-080122	Bolt, Hexa (8-12)	1	
8	26106-060302	Bolt, Hexa (6-30)	4	
9	TA00001404A	HYD PUMP 13CC	1	
10	HH02080000A4	PACKING,HYD.PUMP	1	
11	24311-000180	O-RING, DYNAMIC (Φ18)	2	
12	TCC9040000A4	JOINT M22	1	
13	CVE4020000A4	NIPPLE	1	
14	22217-080000	WASHER, SPRING (Φ 08)	3	
15	26716-080002	NUT,HEX (D8)	1	
16	26116-081152	HEX BOLT	2	
17	26013-080352	SCREW,CAPTIVEWASHERCAP	1	
18	FBB4500000A4	JOINT 3/4	1	
19	24311-000240	O-RING, DYNAMIC (Φ24)	1	
20	TA00025513A	HYD PUMP	1	
21	FL99120000B	BOLT	2	
22	NT34620000A4	ELBOW	1	

FIG C101-1 4520R(2014~)	CaseHYDCylinder	Year/Month 2020/02

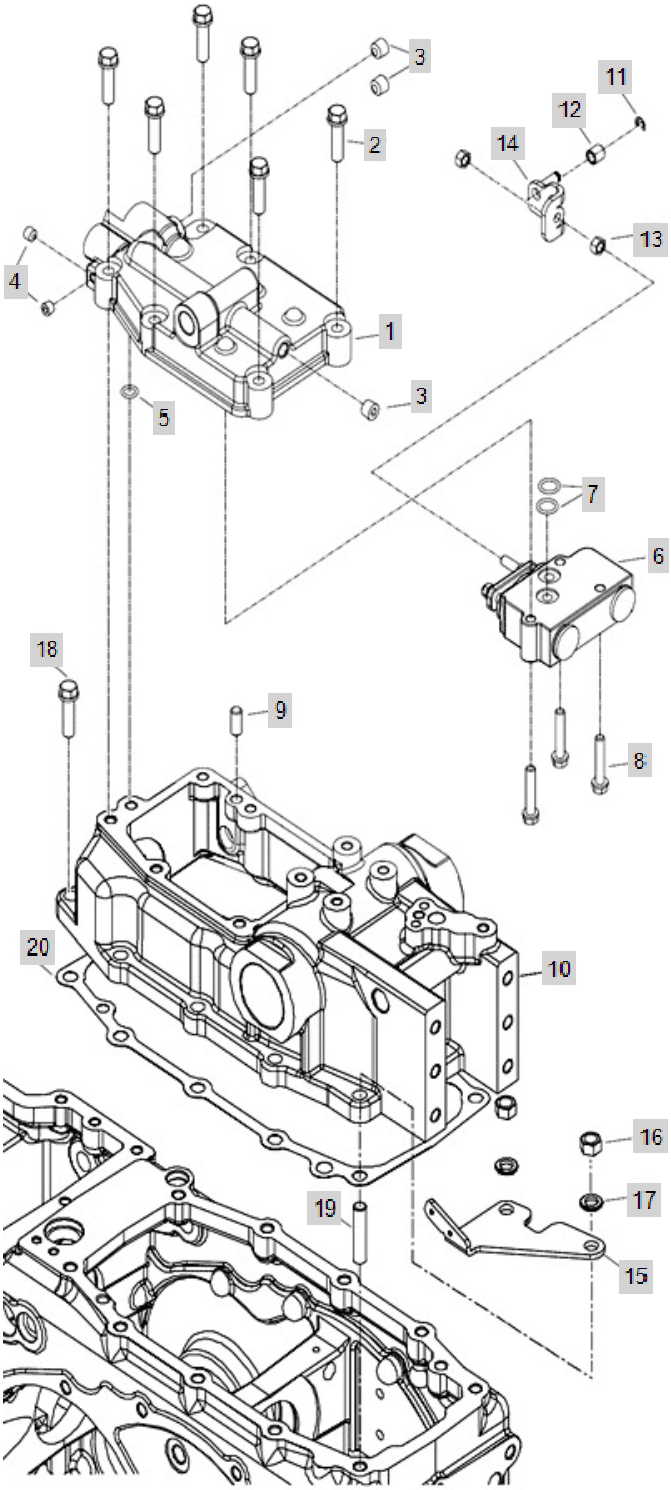

FIG C101-1 4520R(2014~)	CaseHYDCylinder	Year/Month 2020/02

KeyNo.	Part Number	Part Name	Quantity	Other
1	TA00033096A	COVER, HYD CYLINDER	1	
2	26013-100452	HEX BOLT W/WASHER	6	
3	23871-020000	Plug, Pipe	2	
4	23871-010000	PLUG	2	
5	24311-000120	O-RING, DYNAMIC (Φ12)	1	
6	TA00033098A	CONTROL VALVE	1	
7	24315-000160	O-RING	2	
8	26043-080452	BOLT W/WASHER	3	
9	22312-100200	PIN, DOWEL (10-20)	2	
10	TA00033085A	HYD CYLINDER CASE	1	
11	22272-000060	RING, CIRCLIP (Φ 06)	1	
12	TA00033126A	ROLLER	1	
13	26711-080002	NUT	2	
14	TA00034000A	CLEVIS AS'Y	1	
15	TA00034079A	BRACKET, SWITCH	1	
16	26716-120002	BOLT,CYLINDER HEAD(B)	5	
17	22217-120000	WASHER, SPRING (Φ 12)	5	
18	26013-120352	SCREW,CAPTIVEWASHERCAP	5	
19	26216-120352	STEELBOLT	5	
20	TZA1050000A3	PACKING,HYD.CYL.CASE	1	

FIG C101-2 4520R(2014~)	CASE, HYD CYLINDER(2014.12)	Year/Month 2020/02

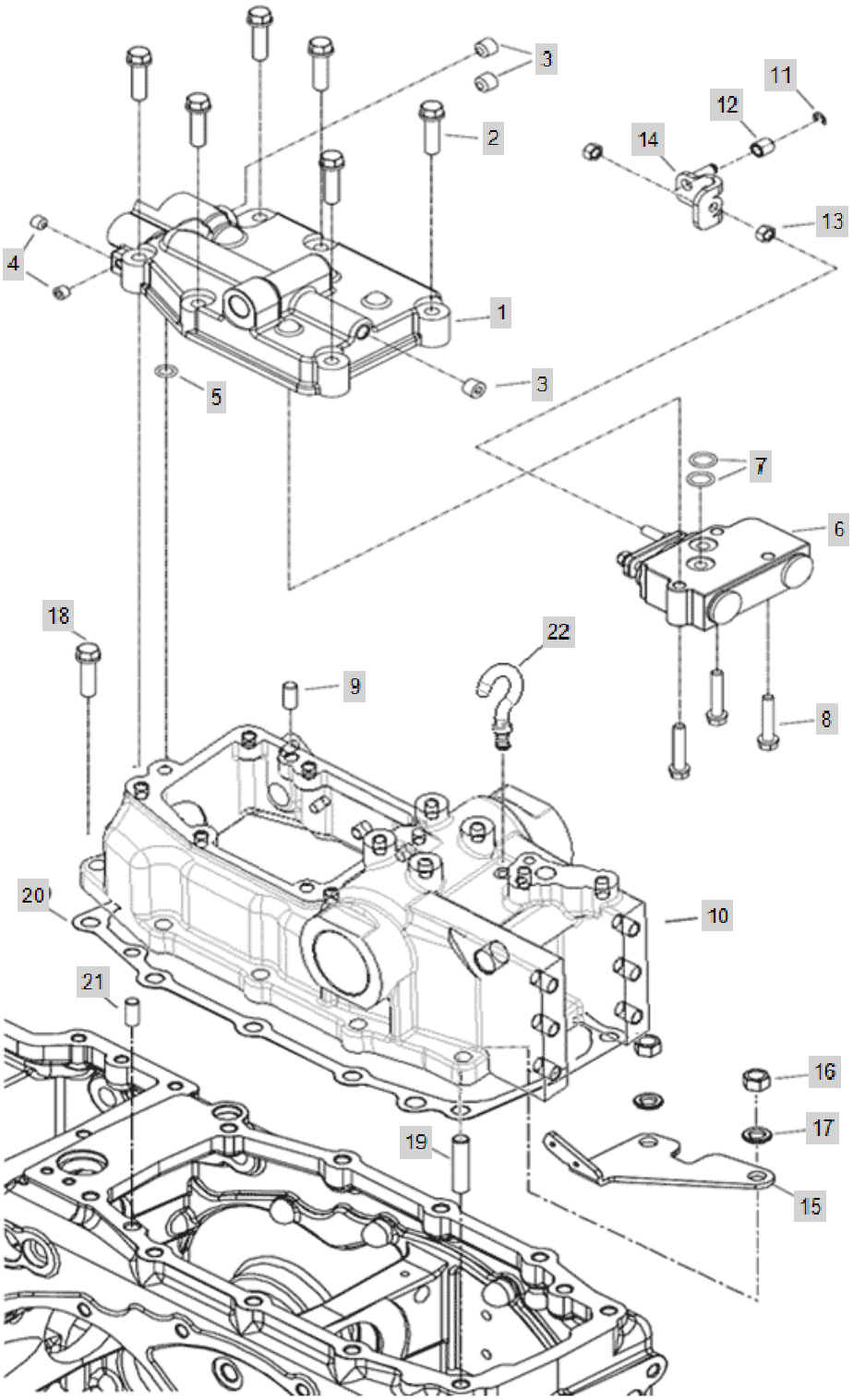

FIG C101-2 4520R(2014~)	CASE, HYD CYLINDER(2014.12)	Year/Month 2020/02

KeyNo.	Part Number	Part Name	Quantity	Other
1	TA00033096D	COVER, HYD CYLINDER	1	
2	26013-100452	HEX BOLT W/WASHER	6	
3	23871-020000	Plug, Pipe	2	
4	23871-010000	PLUG	1	
5	24311-000120	O-RING, DYNAMIC (Φ12)	1	
6	TA00033098B	VALVE, CONTROL	2	
7	24315-000160	O-RING	3	
8	26043-080452	BOLT W/WASHER	2	
9	22312-100200	PIN, DOWEL (10-20)	1	
10	TA00033085D	HYD CYLINDER CASE	1	
11	22272-000060	RING, CIRCLIP (Φ 06)	1	
12	TA00033126A	ROLLER	2	
13	26711-080002	NUT	1	
14	TA00034000A	CLEVIS AS'Y	1	
15	TA00034079B	BRACKET, SWITCH	5	
16	26716-120002	BOLT,CYLINDER HEAD(B)	5	
17	22217-120000	WASHER, SPRING (Φ 12)	5	
18	26013-120352	SCREW,CAPTIVEWASHERCAP	5	
19	26216-120352	STEELBOLT	1	
20	TZA1050000A3	PACKING,HYD.CYL.CASE	1	
21	22312-100180	PIN, DOWEL (10-18)	2	
22	TA00019614A	CAP	1	

FIG C101-3 4520R(2014~)	CASE, HYD CYLINDER	Year/Month 2020/02

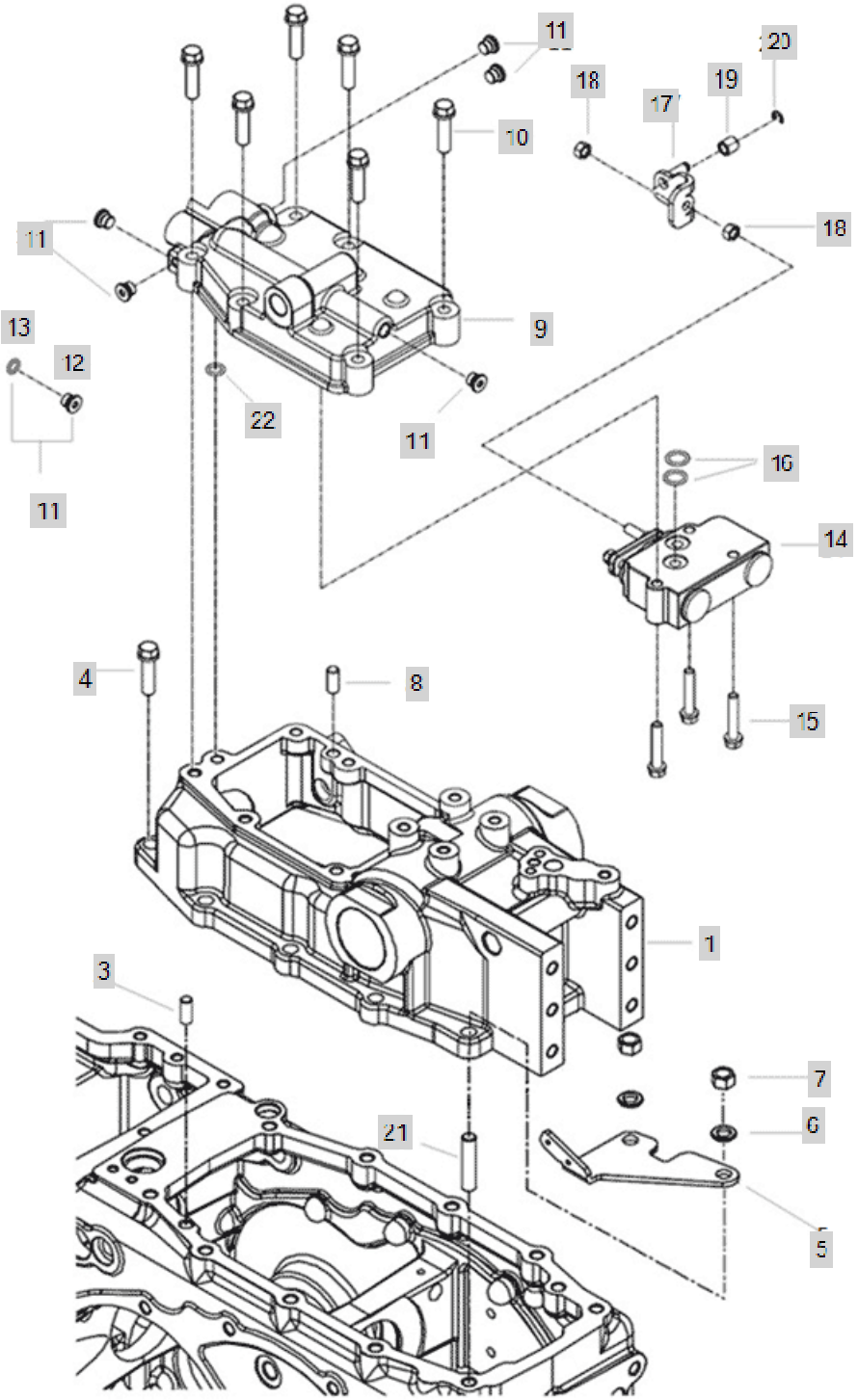

FIG C101-3 4520R(2014~)	CASE, HYD CYLINDER	Year/Month 2020/02

KeyNo.	Part Number	Part Name	Quantity	Other
1	TA00033085I	HYD CYLINDER CASE	1	
3	22312-100180	PIN, DOWEL (10-18)	1	
4	26013-120352	SCREW,CAPTIVEWASHERCAP	5	
5	TA00034079B	BRACKET, SWITCH	1	
6	22217-120000	WASHER, SPRING (Φ 12)	5	
7	26716-120002	BOLT,CYLINDER HEAD(B)	5	
8	22312-100200	PIN, DOWEL (10-20)	2	
9	TA00033096G	COVER, HYD CYLINDER	1	
10	26013-100452	HEX BOLT W/WASHER	6	
11	TA00045690A	PLUG ASS'Y	5	
12	TA00045685A	PLUG	5	
13	24311-000080	O-RING, DYNAMIC (Φ8)	5	
14	TA00033098B	VALVE, CONTROL	1	
15	26043-080452	BOLT W/WASHER	3	
16	24315-000160	O-RING	2	
17	TA00034000C	CLEVIS AS'Y	1	
18	26711-080002	NUT	2	
19	TA00033126A	ROLLER	1	
20	22272-000060	RING, CIRCLIP (Φ 06)	1	
21	26216-120352	STEELBOLT	5	
22	24311-000120	O-RING, DYNAMIC (Φ12)	1	

FIG C101-4 4520R(2014~)	CASE, HYD CYLINDER(2019.08~)	Year/Month 2020/02

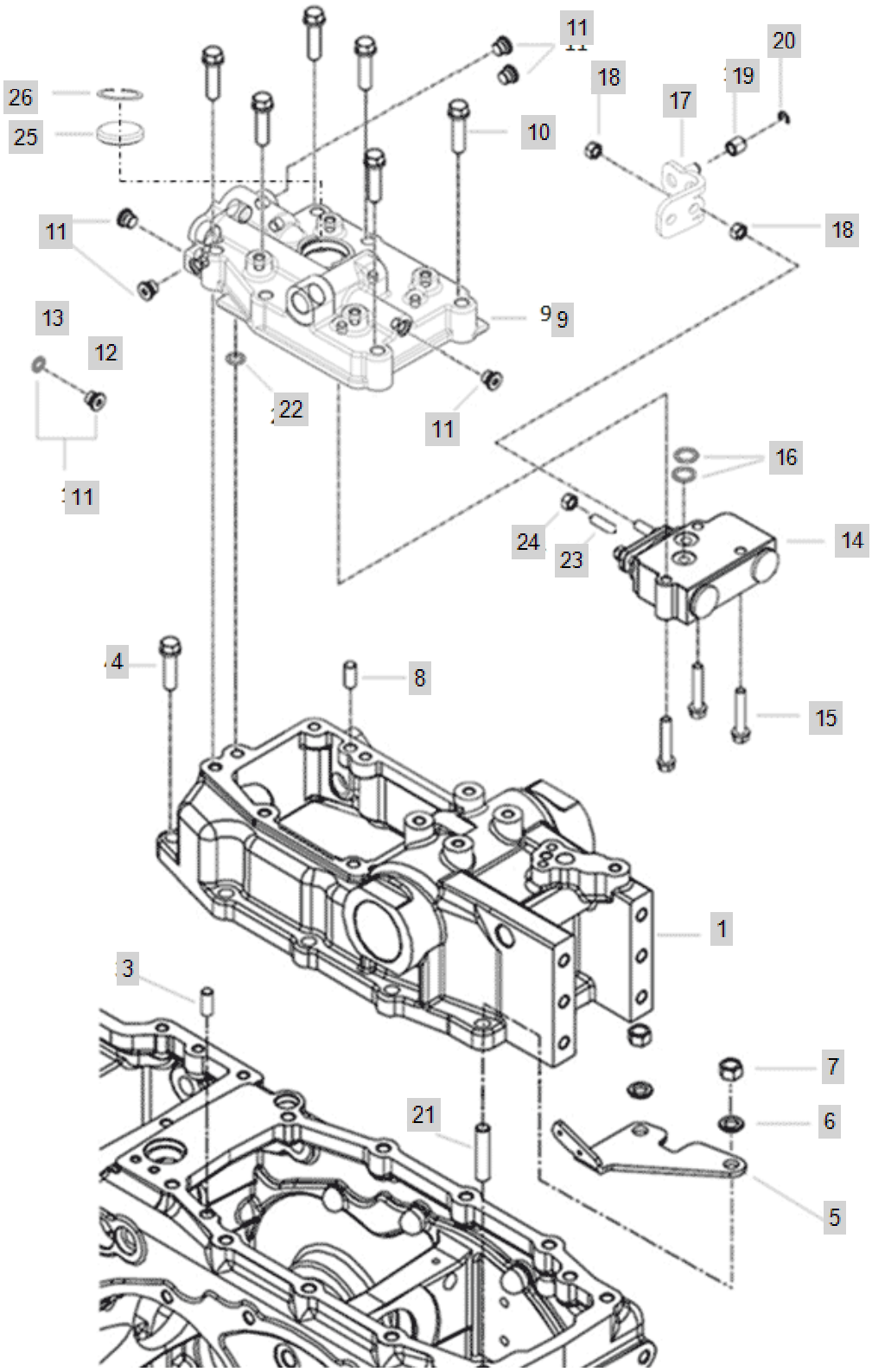

FIG C101-4 4520R(2014~)	CASE, HYD CYLINDER(2019.08~)	Year/Month 2020/02

KeyNo.	Part Number	Part Name	Quantity	Other
1	TA00033085I	HYD CYLINDER CASE	1	
3	22312-100180	PIN, DOWEL (10-18)	1	
4	26013-120352	SCREW,CAPTIVEWASHERCAP	5	
5	TA00034079B	BRACKET, SWITCH	1	
6	22217-120000	WASHER, SPRING (Φ 12)	5	
7	26716-120002	BOLT,CYLINDER HEAD(B)	5	
8	22312-100200	PIN, DOWEL (10-20)	2	
9	TA00033096G	COVER, HYD CYLINDER	1	
10	26013-100452	HEX BOLT W/WASHER	6	
11	TA00045690A	PLUG ASS'Y	5	
12	TA00045685A	PLUG	5	
13	24311-000080	O-RING, DYNAMIC (Φ8)	5	
14	TA00033098B	VALVE, CONTROL	1	
15	26043-080452	BOLT W/WASHER	3	
16	24315-000160	O-RING	2	
17	TA00060775A	CLEVIS	1	
17-1	TA00034000C	CLEVIS AS'Y	1	delete
18	26711-080002	NUT	2	
19	TA00033126A	ROLLER	1	
20	22272-000060	RING, CIRCLIP (Φ 06)	1	
21	26216-120352	STEELBOLT	5	
22	24311-000120	O-RING, DYNAMIC (Φ12)	1	
23	TA00060360A	BOLT, GUIDE	1	
24	26716-080002	NUT,HEX (D8)	1	
25	27260-400000		1	
26	22252-000400	RING, CIRCLIP (Φ 40)	1	

FIG C102-1 4520R(2014~)	IND PTO VALVE SUPPORT	Year/Month 2020/02

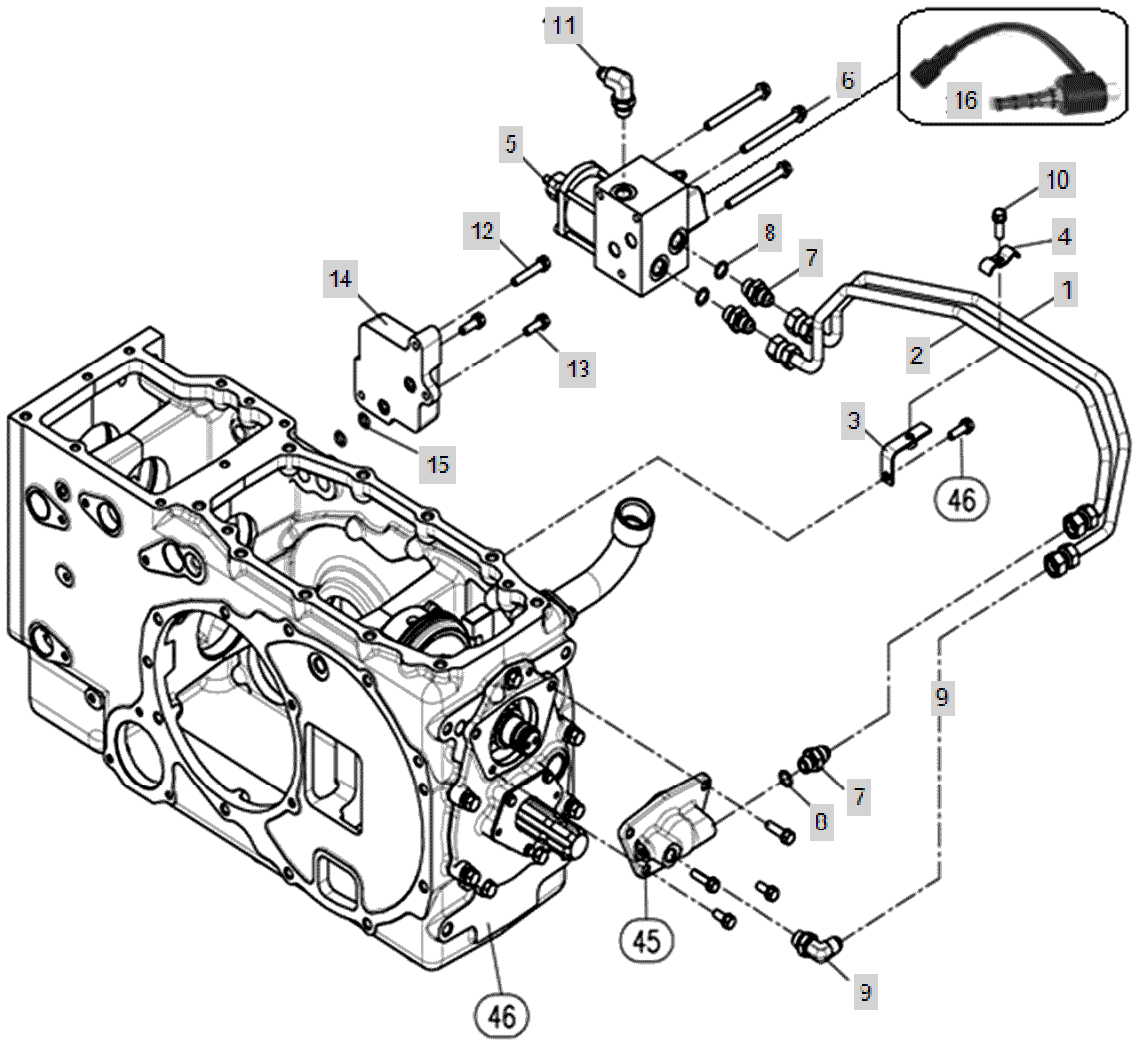

FIG C102-1 4520R(2014~)	IND PTO VALVE SUPPORT	Year/Month 2020/02

KeyNo.	Part Number	Part Name	Quantity	Other
1	NTA2010000A2	PTO Pipe, Lo-Press	1	
2	NTA2020000A2	Pipe, Hi-Press	1	
3	NTA2030000A4	Pipe Support(lower)	1	
4	NTA2040000A4	Pipe Support(upper)	1	
5	NTA2100000A2	PTO VALVE	1	
6	26106-080902	SCREW,HEXFLANGEHEADCAP	3	
7	TTA3880000A4	Adapt, Connect PF3/8	2	
8	24311-000140	O-RING, DYNAMIC (Φ14)	2	
9	CEE4050000A4	ELBOW (3/8)	1	
10	26013-080252	Bolt, Hexa (8-25)	1	
11	NT34620000A4	ELBOW	1	
12	26013-080452	SCREW,CAPTIVEWASHERCAP	1	
13	26013-080252	Bolt, Hexa (8-25)	2	
14	NT45880000A2	VALVE BLOCK	1	
15	24311-000120	O-RING, DYNAMIC (Φ12)	2	
16	TA00032230A	SOLENOID VALVE	1	

FIG C102-2 4520R(2014~)	IND PTO VALVE SUPPORT	Year/Month 2020/02

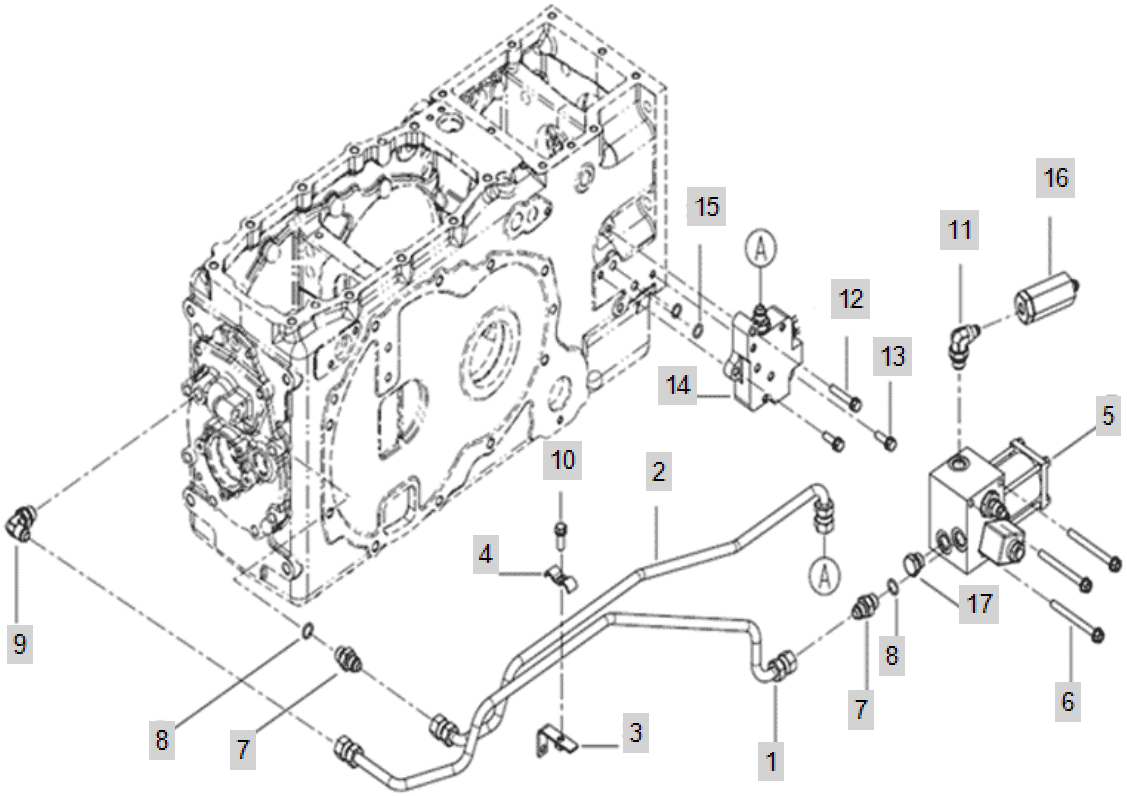

FIG C102-2 4520R(2014~)	IND PTO VALVE SUPPORT	Year/Month 2020/02

KeyNo.	Part Number	Part Name	Quantity	Other
1	TA00047915A	HIGH PRESSER PIPE	1	
2	TA00047913A	LOW PRESSER PIPE	1	
3	NTA2030000A4	Pipe Support(lower)	1	
4	NTA2040000A4	Pipe Support(upper)	1	
5	NTA2100000A2	PTO VALVE	1	
6	26106-080852	SCREW,HEXFLANGEHEADCAP	3	
7	TTA3880000A4	Adapt, Connect PF3/8	3	
8	24311-000140	O-RING, DYNAMIC (Φ14)	3	
9	CEE4050000A4	ELBOW (3/8)	1	
10	26013-080252	Bolt, Hexa (8-25)	1	
11	NT34620000A4	ELBOW	1	
12	26013-080452	SCREW,CAPTIVEWASHERCAP	1	
13	26013-080252	Bolt, Hexa (8-25)	2	
14	TA00047086C	BLOCK ASSY	1	
15	24311-000120	O-RING, DYNAMIC (Φ12)	4	
16	TA00045069A	STRAINER	1	
17	NTA1130000A4	PLUG	2	

FIG C104-1 4520R(2014~)	PistonAssembly	Year/Month 2020/02

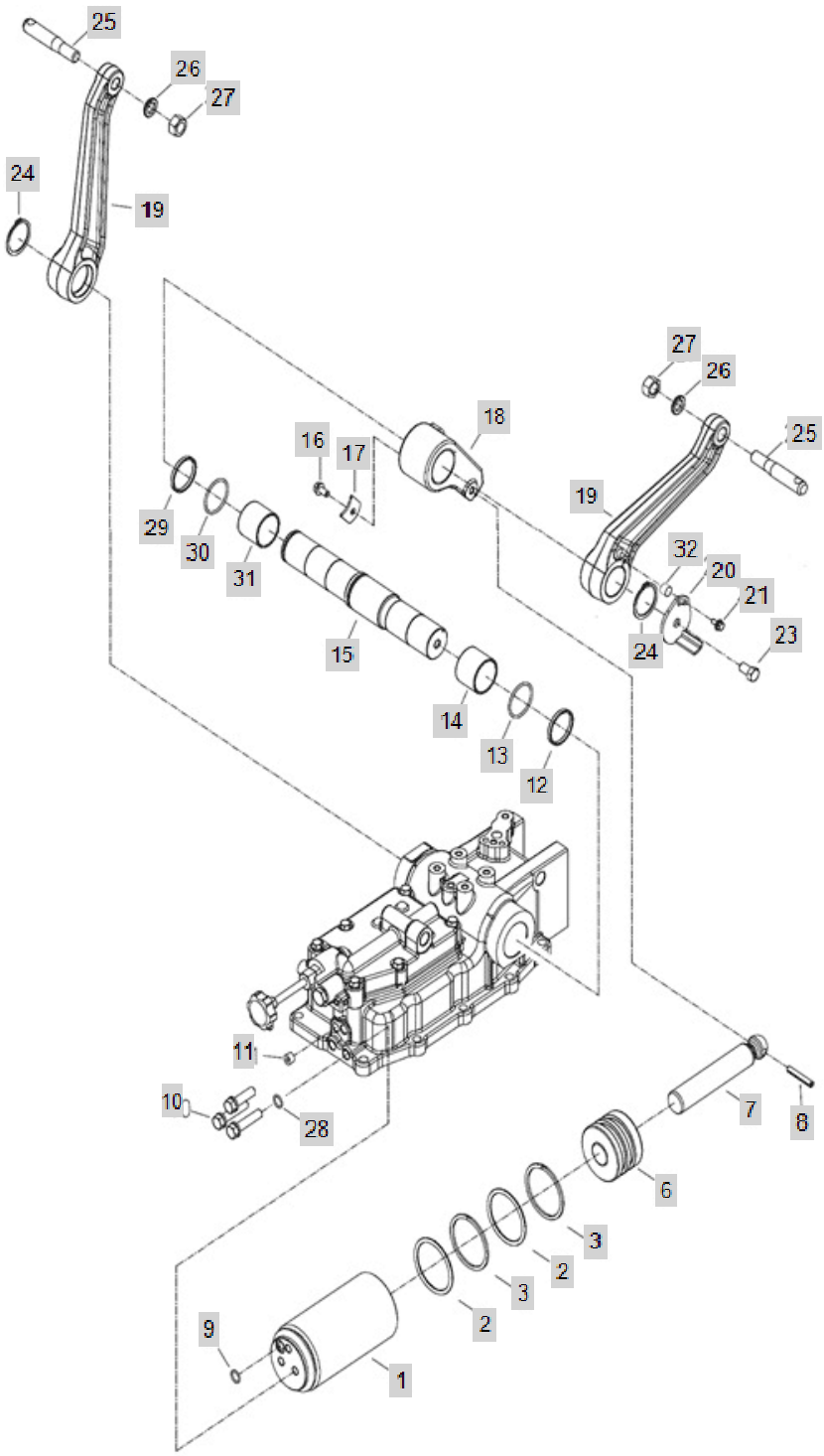

FIG C104-1 4520R(2014~)	PistonAssembly	Year/Month 2020/02

KeyNo.	Part Number	Part Name	Quantity	Other
1	TA00034002A	CYLINDER ASSY	1	
2	TA00034006A	O-RING	2	
3	TA00034007A	BACK UP RING	2	
6	TA00034005A	PISTON	1	
7	TA00033094A	ROD, PISTON	1	
8	22351-080050	PIN, SPRING (8-50)	1	
9	24311-000140	O-RING, DYNAMIC (Φ14)	1	
10	26156-120552	HEXAGON HEAD BOLT	3	
11	23871-010000	PLUG	1	
12	TA00035651A	RING	1	
13	24321-000500	O-RING (D50)	1	
14	TA00035650A	BUSH	1	
15	TA00033089C	SHAFT, LIFT LINK	1	
16	26106-080162	SCREW,HEXFLANGEHEADCAP	1	
17	TA00033095A	PLATE	1	
18	TA00033093A	CRANK, LIFT	1	
19	TA00033131B	LIFT ARM RH	2	
20	TA00034082C	CAMP ASSY	1	
21	26106-060202	HEXFLANGEBOLT	1	
23	26106-100202	HEX BOLT, (10-20)	1	
24	22242-000450	SNAP RING, SHAFT (Φ 45)	2	
25	TB36510000A4	PIN, LIFT ARM	2	
26	22217-160000	WASHER, SPRING (Φ 16)	2	
27	26736-160002	HEXNUT	2	
28	TA00035675A	BONDED SEAL	3	
29	TA00033100A	RING, BACK UP	1	
30	24321-000450	O-RING, DYNAMIC (Φ45)	1	
31	TA00033099A	BUSH	1	
32	TA00035684A	COLLAR	1	

FIG C104-2 4520R(2014~)	PistonAssembly	Year/Month 2020/02

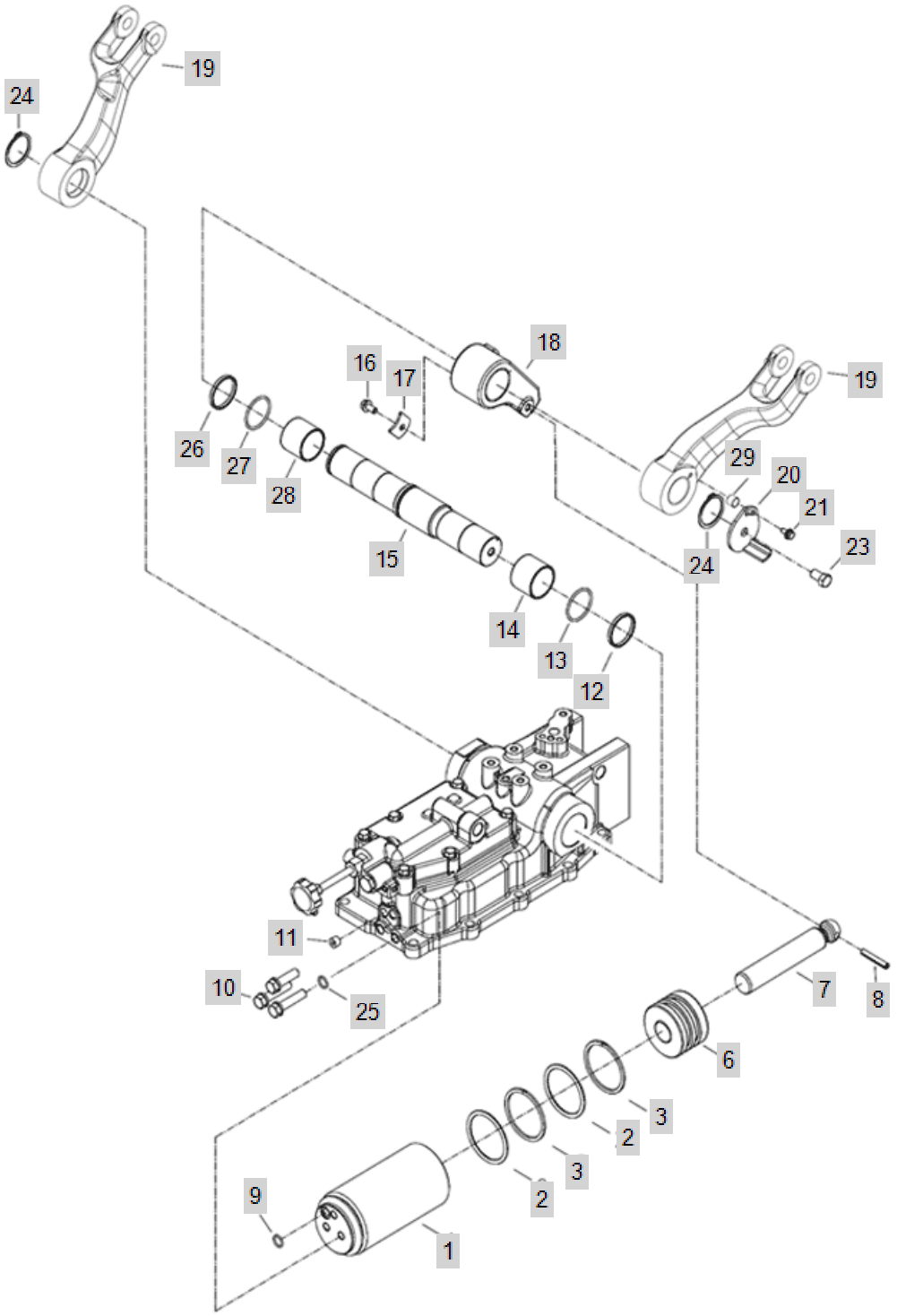

FIG C104-2 4520R(2014~)	PistonAssembly	Year/Month 2020/02

KeyNo.	Part Number	Part Name	Quantity	Other
1	TA00046960B	CYLINDER	1	
2	TA00046958A	O RING	2	
3	TA00046957A	BACKUP-RING	2	
6	TA00046959A	PISTON	1	
7	TA00033094A	ROD, PISTON	1	
8	22351-080050	PIN, SPRING (8-50)	1	
9	34311-000140	SUB TO-> 24311-000140	1	
10	26156-120552	HEXAGON HEAD BOLT	3	
11	TA00045690A	PLUG ASS'Y	1	
12	TA00035651A	RING	1	
13	24321-000500	O-RING (D50)	1	
14	TA00035650A	BUSH	1	
15	TA00033089C	SHAFT, LIFT LINK	1	
16	26106-080162	SCREW,HEXFLANGEHEADCAP	1	
17	TA00033095A	PLATE	1	
18	TA00033093B	CRANK, LIFT	1	
19	TA00040302B	LIFT ARM	2	
20	TA00034082C	CAMP ASSY	1	
21	26106-060202	HEXFLANGEBOLT	1	
23	26106-100202	HEX BOLT, (10-20)	1	
24	22242-000450	SNAP RING, SHAFT (Φ 45)	2	
25	TA00035675A	BONDED SEAL	3	
26	TA00033100A	RING, BACK UP	1	
27	24321-000450	O-RING, DYNAMIC (Φ45)	1	
28	TA00033099A	BUSH	1	
29	TA00035684A	COLLAR	1	

FIG C108 4520R(2014~)	SaftyValve	Year/Month 2020/02

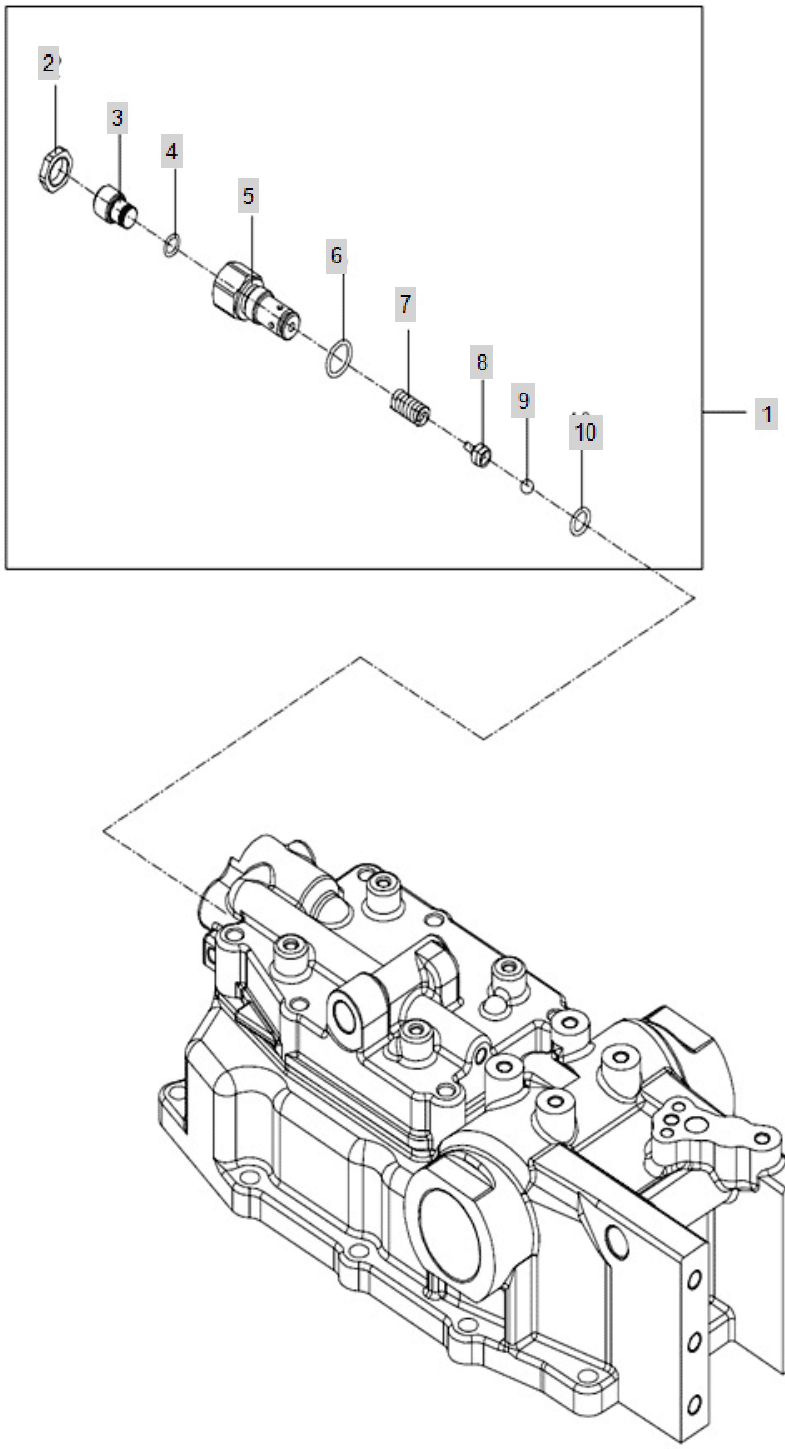

FIG C108 4520R(2014~)	SaftyValve	Year/Month 2020/02

KeyNo.	Part Number	Part Name	Quantity	Other
1	TA00036187A	SAFETY VALVE	1	
2	TA00036419A	NUT	1	
3	TA00036418A	BOLT	1	
4	24315-000100	O-RING	1	
5	TA00036392A	BODY, SAFETY VALVE	1	
6	24315-000180	O-RING(PTYPE)	1	
7	TA00036420A	SPRING	1	
8	TA00036417A	BALL GUIDE	1	
9	24190-100001	Ball, Steel (5/16)	1	
10	24315-000125	O-RING(P-TYPE)	1	

FIG C109 4520R(2014~)	StopValve	Year/Month 2020/02

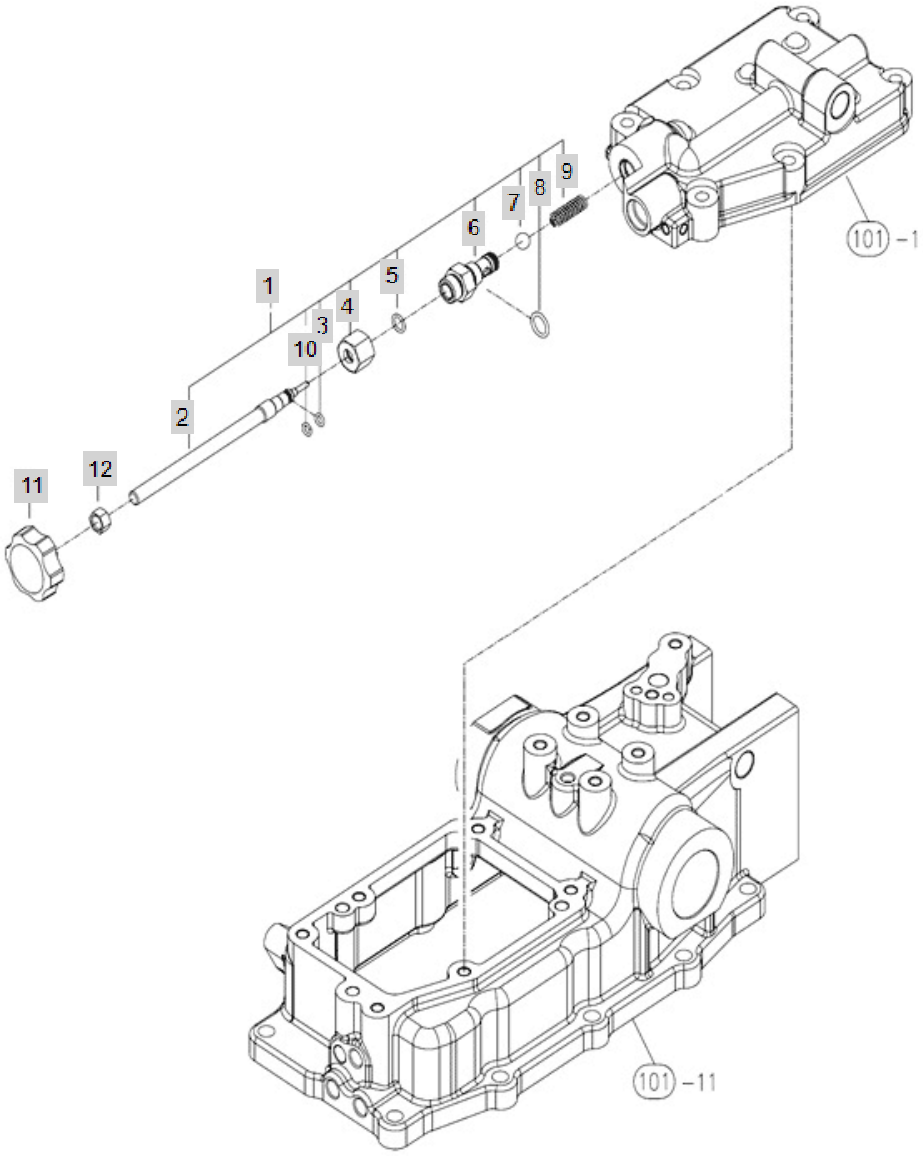

FIG C109 4520R(2014~)	StopValve	Year/Month 2020/02

KeyNo.	Part Number	Part Name	Quantity	Other
1	TA00036227A	STOP V/V(PTO3)	1	
2	TA00036228A	STOP BOLT	1	
3	24315-000060	O RING	1	
4	TA00033888A	NUT	1	
5	24311-000100	O-RING, DYNAMIC (Φ10)	1	
6	TA00033890A	BODY	1	
7	24190-140001	STEEL BALL	1	
8	24311-000140	O-RING, DYNAMIC (Φ14)	1	
9	TA00034091A	SPRING, LOCKING VALVE	1	
10	TA00036537A	RING, BACK UP	1	
11	TTA9040000A4	KNOB	1	
12	26716-100002	Nut, Hexa (Φ10)	1	

FIG C111-1 4520R(2014~)	HYD ControlPositionType	Year/Month 2020/02

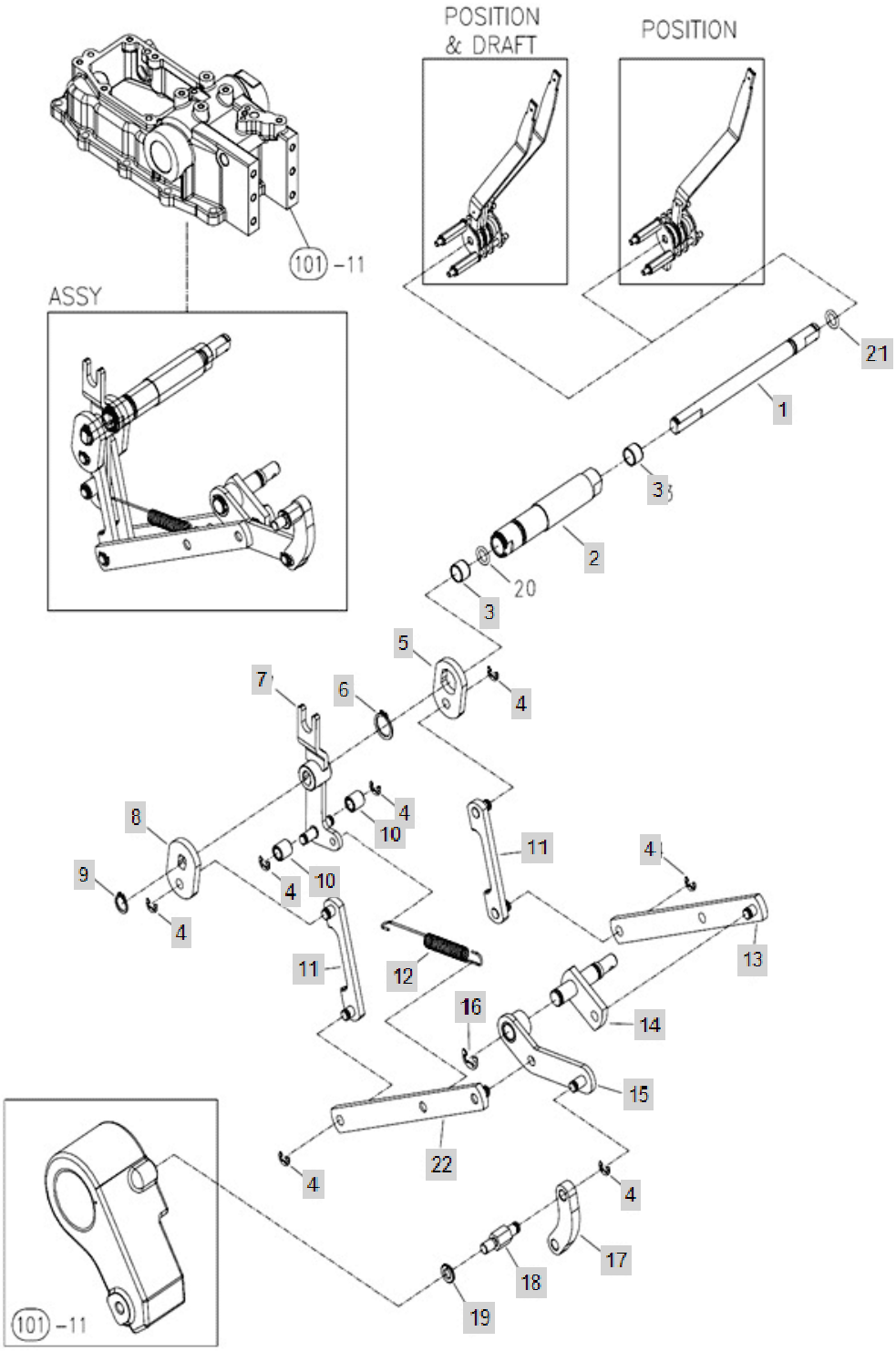

FIG C111-1 4520R(2014~)	HYD ControlPositionType	Year/Month 2020/02

KeyNo.	Part Number	Part Name	Quantity	Other
1	TA00033128A	SHAFT	1	
2	TA00033127A	SHAFT	1	
3	24550-012100	BUSH	2	
4	22272-000060	RING, CIRCLIP (Φ 06)	7	
5	TA00033119A	CONTROL PLATE, DRAFT	1	
6	22242-000180	SNAP RING, SHAFT (Φ 18)	1	
7	TA00033121B	LINK ASSY, CONNECTING	1	
8	TA00033120A	CONTROL PLATE, POSITION	1	
9	22242-000120	SNAP RING, SHAFT (Φ 12)	1	
10	TA00033126A	ROLLER	2	
11	TA00033117A	LINK ASSY B	2	
12	TA00033902B	SPRING	1	
13	TA00033111A	CONTROL LINK. DRAFT LOAD	1	
14	TA00033108A	LINK ASSY (IN)	1	
15	TA00033106A	FEED BACK LINK, POSTION	1	
16	22272-000090	RING, CIRCLIP (Φ 09)	1	
17	TA00033102A	LINK, LIFT CRANK	1	
18	TA00033101A	LINK PIN, FEEDBACK	1	
19	22217-080000	WASHER, SPRING (Φ 08)	1	
20	24311-000160	O-RING, DYNAMIC (Φ16)	1	
21	24311-240100	SEAL, O-RING	1	
22	TA00033114A	LINK, POSITION	1	

FIG C111-2 4520R(2014~)	HYD CONTROL POSITION TYPE	Year/Month 2020/02

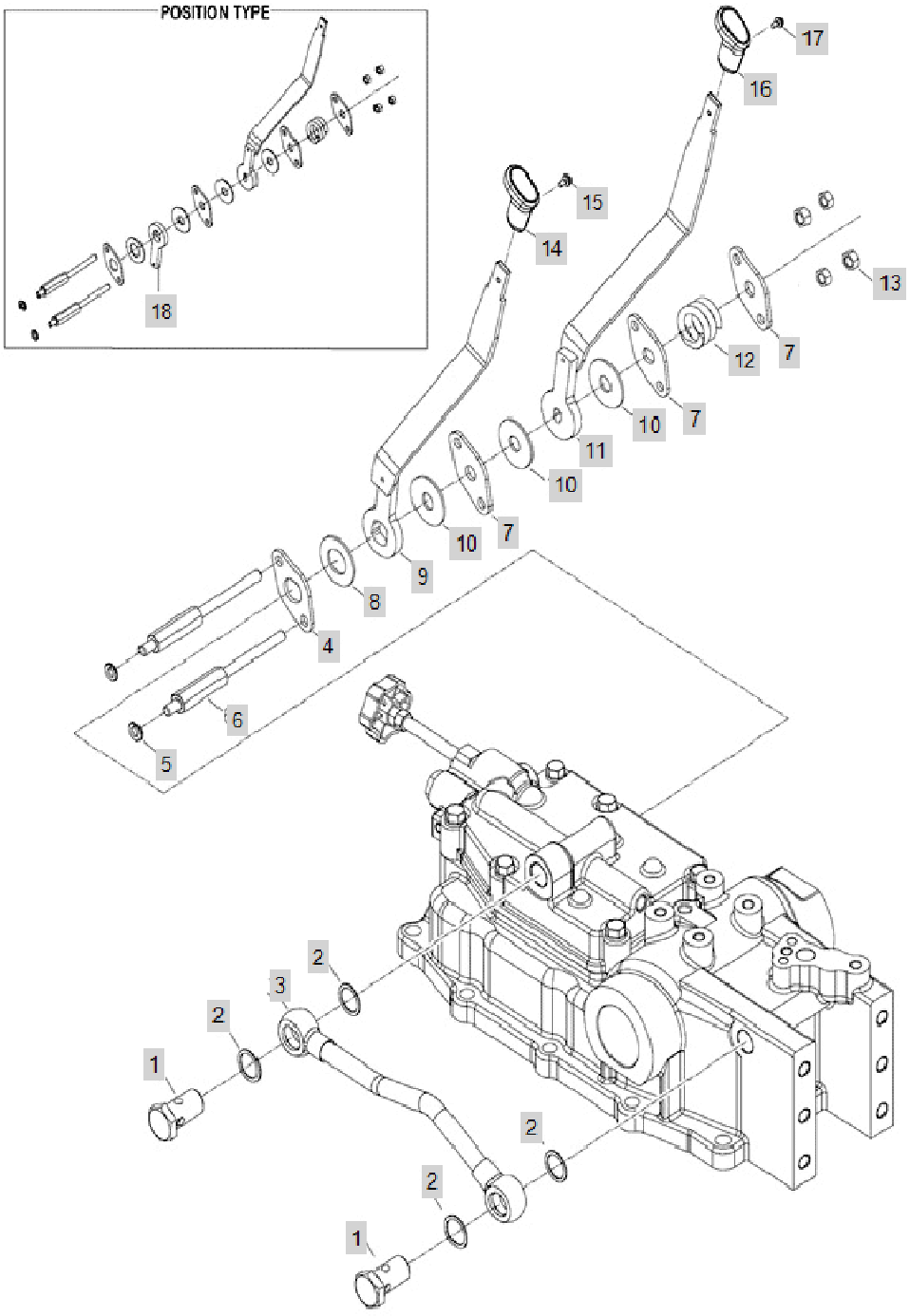

FIG C111-2 4520R(2014~)	HYD CONTROL POSITION TYPE	Year/Month 2020/02

KeyNo.	Part Number	Part Name	Quantity	Other
1	TTB4180000A4	BOLT	2	
2	TA00036405A	BONDED SEAL	4	
3	TA00034085A	MOUNTING SUPPORT	1	
4	TA00033964A	BRACKET	1	
5	22217-080000	WASHER, SPRING (Φ 08)	2	
6	TA00033978A	BOLT	2	
7	TA00033965A	BRACKET A	3	
8	TA00033155A	FRICTION PLATE	1	
9	TA00034008A	LEVER, D-CONTROL	1	
10	TA00033966A	PLATE A	3	
11	TA00034016A	LEVER, P-CONTROL	1	
12	TA00033901A	SPRING	1	
13	26716-080002	NUT,HEX (D8)	4	
14	TA00058250A	LEVER, D-CONTROL	1	
14-1	TA00015806A	LEVER, D-CONTROL	1	DELETE
15	26023-040102	SCREW W/WASHER	1	
16	TA00056011A	LEVER, P-CONTRON	1	
16-1	TA00015831A	KNOB, POSITION CONTROL	1	DELETE
17	26023-040162	SCREW	1	
18	TA00033156A	LEVER ARM, DRAFT	1	

FIG C113-1 4520R(2014~)	DraftControl	Year/Month 2020/02

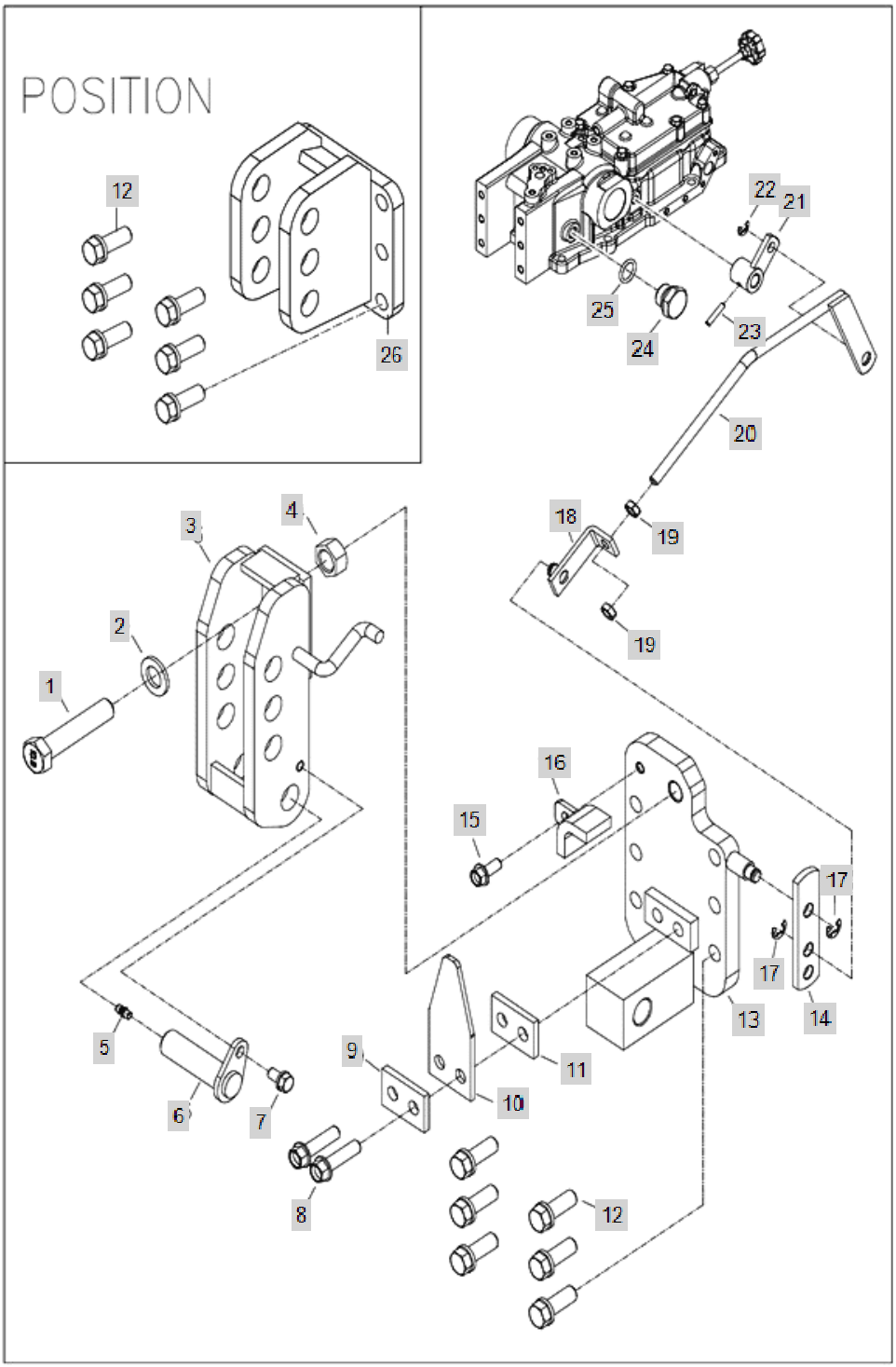

FIG C113-1 4520R(2014~)	DraftControl	Year/Month 2020/02

KeyNo.	Part Number	Part Name	Quantity	Other
1	TA00000660A	BOLT	1	
2	22137-160000	WASHER, PLAIN (Φ 16)	1	
3	TA00033138A	HINGE D, TOP LINK	1	
4	26736-160002	HEXNUT	1	
5	TA27160000A4	GREASE NIPPLE	1	
6	TTB3090000A4	PIN,HINGE	1	
7	26013-080162	Bolt, Hexa (8-16)	1	
8	26106-100402	SCREW,HEXFLANGEHEADCAP	2	
9	TA00034144A	PLATE	1	
10	TA00033137A	PLATE, HINGE	1	
11	TA00034144A	PLATE	1	
12	26013-120352	SCREW,CAPTIVEWASHERCAP	6	
13	TA00034018B	SUPPORT D, HINGE ASS'Y	1	
14	TA00033143A	PLATE	1	
15	26106-080202	SQR FLANGE BOLT	1	
16	TA00034142B	PLATE ASS'Y	1	
17	22272-000080	RING, CIRCLIP (Φ 08)	2	
18	TA00033144A	PLATE ASSY	1	
19	26756-080002	NUT	2	
20	TA00033150A	CONTROL ROD, DRAFT	1	
21	TA00033147A	LINK ASSY (OUT)	1	
22	22272-000060	RING, CIRCLIP (Φ 06)	1	
23	22351-040020	PIN, SPRING (4X20)	1	
24	NTA1130100A9		1	
25	24311-000140	O-RING, DYNAMIC (Φ14)	1	
26	TA00034323A	BRACKET ASS'Y, TOP LINK	1	

FIG C113-2 4520R(2014~)	DRAFT CONTROL(2014.12)	Year/Month 2020/02

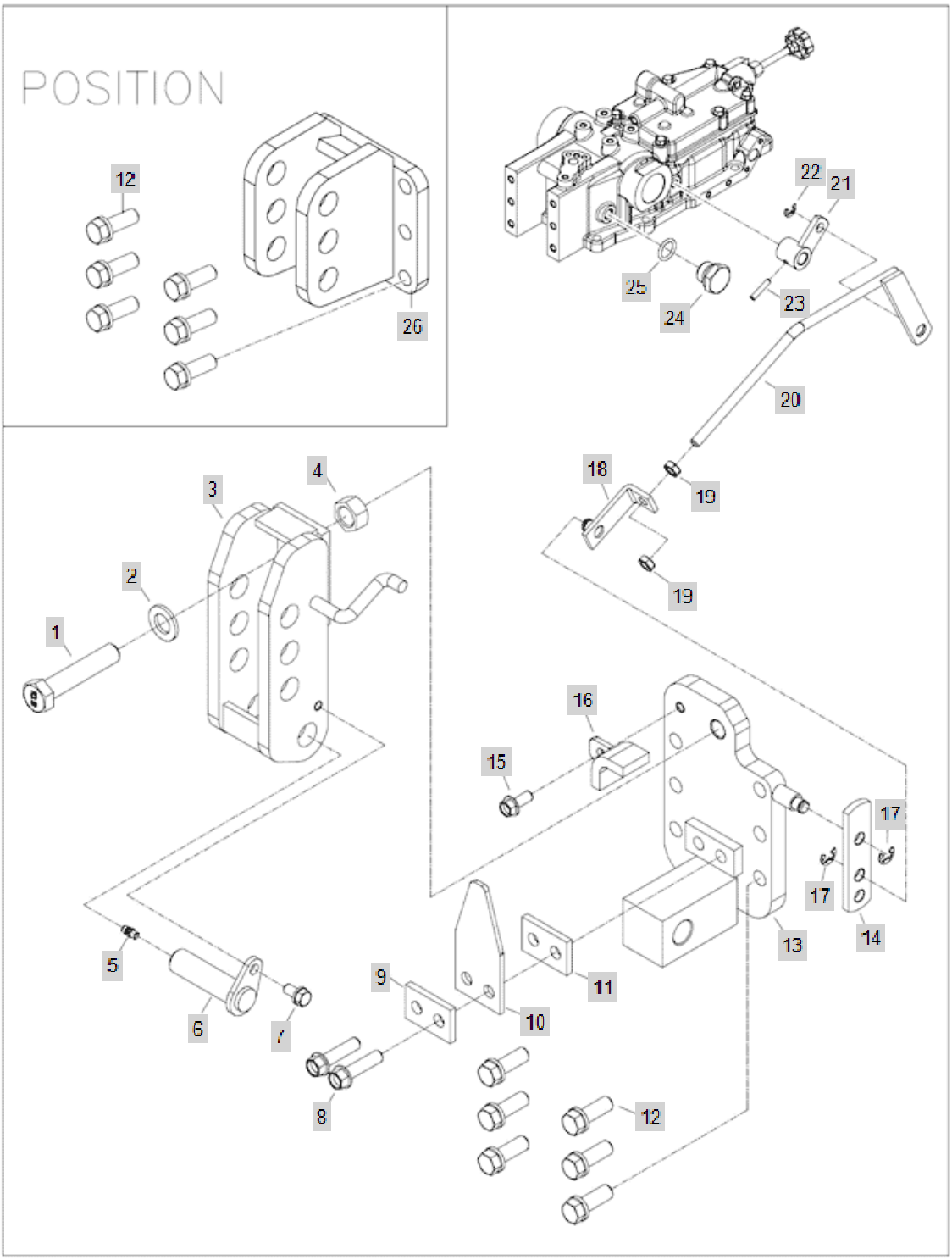

FIG C113-2 4520R(2014~)	DRAFT CONTROL(2014.12)	Year/Month 2020/02

KeyNo.	Part Number	Part Name	Quantity	Other
1	TA00000660A	BOLT	1	
2	22137-160000	WASHER, PLAIN (Φ 16)	1	
3	TA00033138A	HINGE D, TOP LINK	1	
4	26736-160002	HEXNUT	1	
5	TA27160000A4	GREASE NIPPLE	1	
6	TTB3090000A4	PIN,HINGE	1	
7	26013-080162	Bolt, Hexa (8-16)	1	
8	26106-100402	SCREW,HEXFLANGEHEADCAP	2	
9	TA00034144A	PLATE	1	
10	TA00033137A	PLATE, HINGE	1	
11	TA00034144A	PLATE	1	
12	26013-120352	SCREW,CAPTIVEWASHERCAP	6	
13	TA00034018B	SUPPORT D, HINGE ASS'Y	1	
14	TA00033143A	PLATE	1	
15	26106-080202	SQR FLANGE BOLT	1	
16	TA00034142B	PLATE ASS'Y	1	
17	22272-000080	RING, CIRCLIP (Φ 08)	2	
18	TA00033144A	PLATE ASSY	1	
19	26756-080002	NUT	2	
20	TA00033150A	CONTROL ROD, DRAFT	1	
21	TA00033147A	LINK ASSY (OUT)	1	
22	22272-000060	RING, CIRCLIP (Φ 06)	1	
23	22351-040020	PIN, SPRING (4X20)	1	
24	NTA1130100A9		1	
25	24311-000140	O-RING, DYNAMIC (Φ14)	1	
26	TA00034323A	BRACKET ASS'Y, TOP LINK	1	

FIG C115D-1 4520R(2014~)	HYDPIping	Year/Month 2020/02

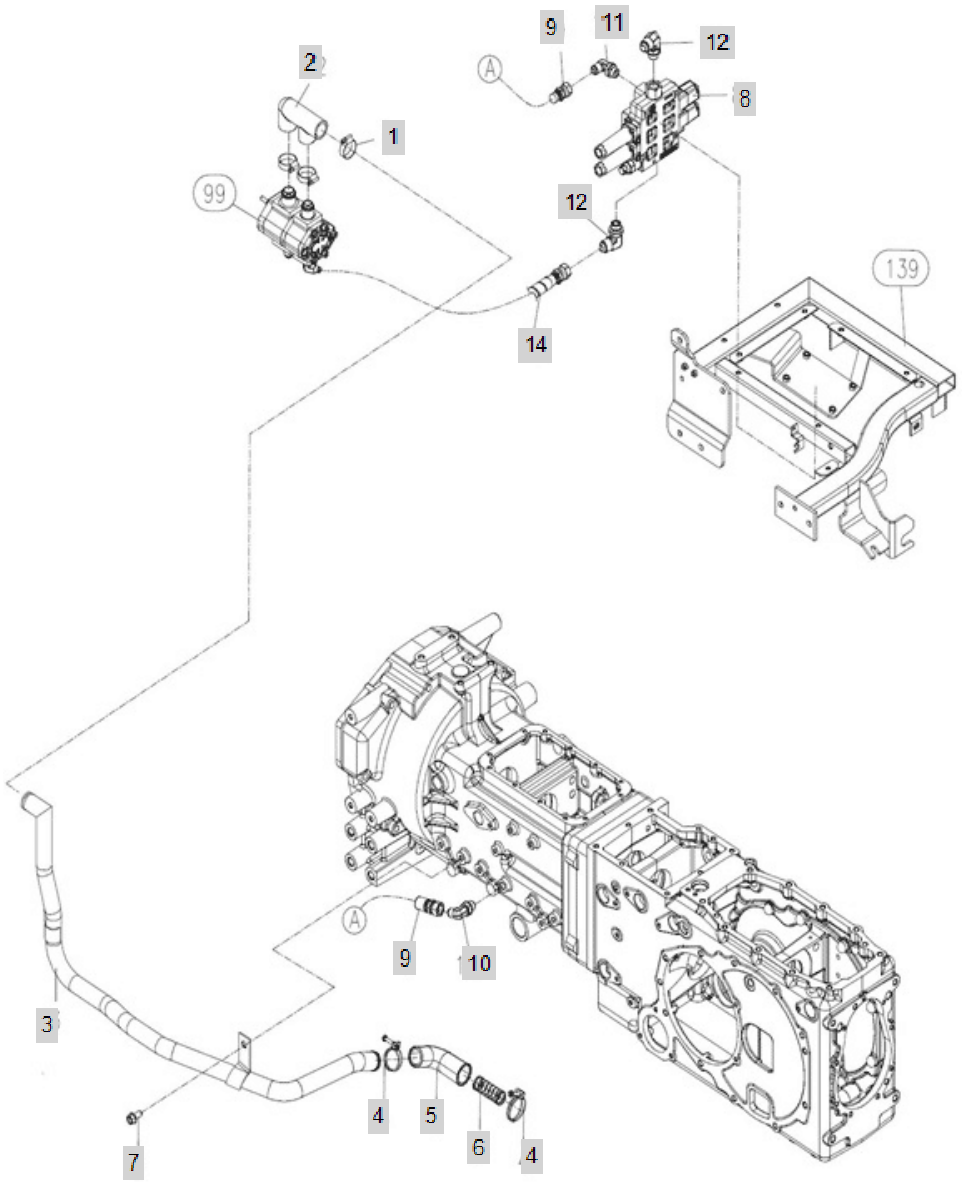

FIG C115D-1 4520R(2014~)	HYDPIping	Year/Month 2020/02

KeyNo.	Part Number	Part Name	Quantity	Other
1	23000-041000	HOSECLAMP	3	
2	FBB4510000A3	HOSE, LOWER PRESSURE	1	
3	TA00036220A	PIPE ASS'Y, LOWER PRESSURE	1	
4	NTB4310000A4	HOSEBAND	2	
5	NTB4070000B	RUBBER HOSE, LOWER PRESSURE	1	
6	TTB4360000A4	SPRINGA	2	
7	26106-080202	SQR FLANGE BOLT	1	
8	TA00026056A	FRONT SCV ASSY	1	
9	TA00017888A	HYD HOSE 1/2"	1	
10	TA00018066A	LOCK NUT ELBOW 90D 3/8-1/4	1	
11	TA00022104B	ELBOW (M18XP1.5_PF3/8)	1	
12	TA00026065A	ELBOW 90 3/8-1/2	2	
14	TA00026594A	HOSE HIGH PRESSURE F	1	

FIG C115D-2 4520R(2014~)	HYD PIPING_USTODTKS(2014.12)	Year/Month 2020/02

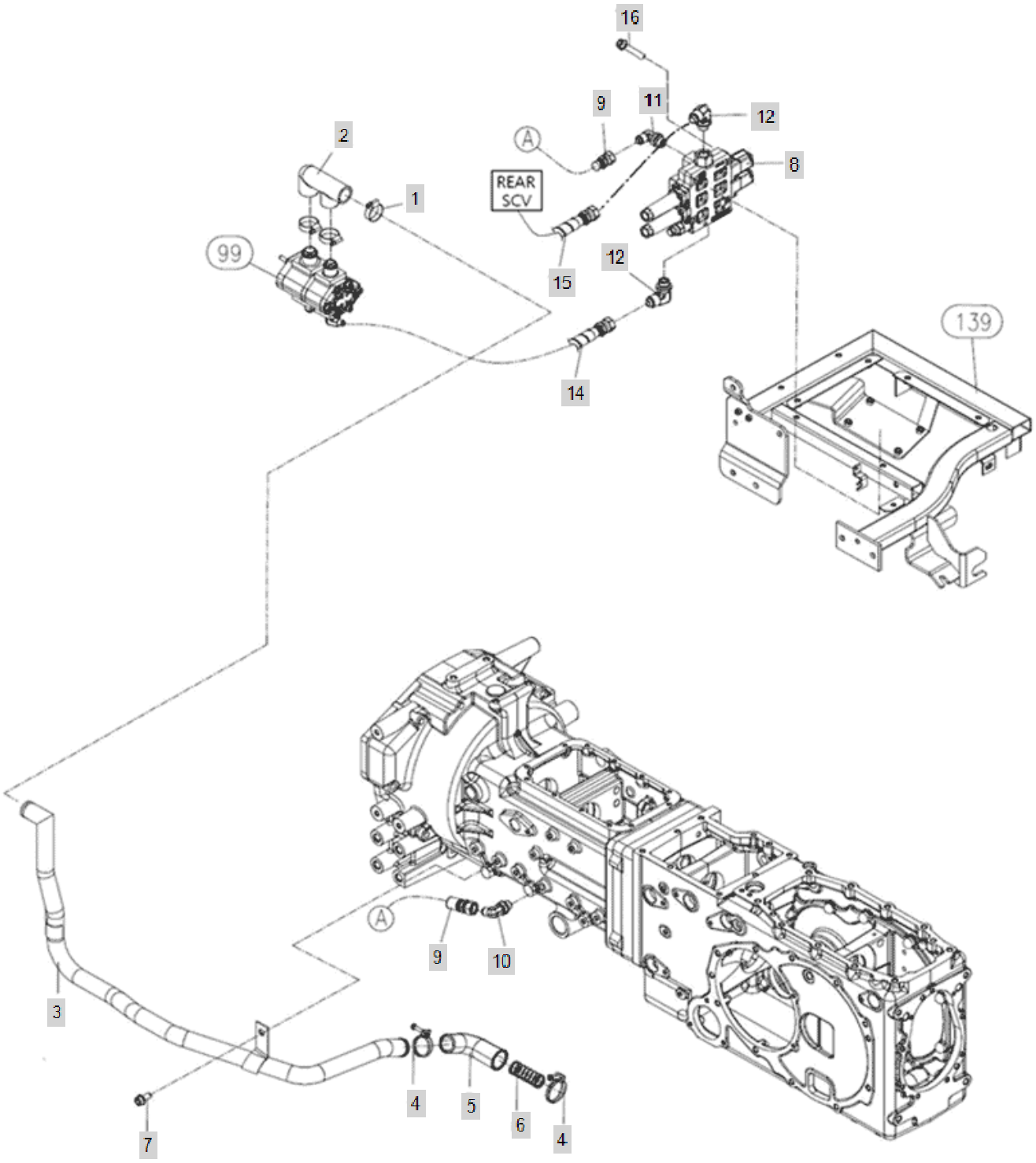

FIG C115D-2 4520R(2014~)	HYD PIPING_USTODTKS(2014.12)	Year/Month 2020/02

KeyNo.	Part Number	Part Name	Quantity	Other
1	23000-041000	HOSECLAMP	3	
2	FBB4510000A2	HOSE	1	
3	TA00036220A	PIPE ASS'Y, LOWER PRESSURE	1	
4	NTB4310000A4	HOSEBAND	2	
5	TA00017333A	HOSE, LOW PRESSURE	1	
6	TTB4360000A4	SPRINGA	2	
7	26106-080202	SQR FLANGE BOLT	1	
8	TA00026056B	FRONT REMOTE VALVE	1	
9	TA00030012A	HOSE	1	
10	TA00018066A	LOCK NUT ELBOW 90D 3/8-1/4	1	
11	TA00022104B	ELBOW (M18XP1.5_PF3/8)	1	
12	TA00026065A	ELBOW 90 3/8-1/2	2	
14	TA00001408B	HIGH PRESSURE HOSE 1/2" (F)	1	
15	TA00034077A	RUBBER HOSE,HIGH PRESSURE	1	
16	26106-080602	SCREW,HEXFLANGEHEADCAP	3	

FIG C115D-3 4520R(2014~)	HYD PIPING	Year/Month 2020/02

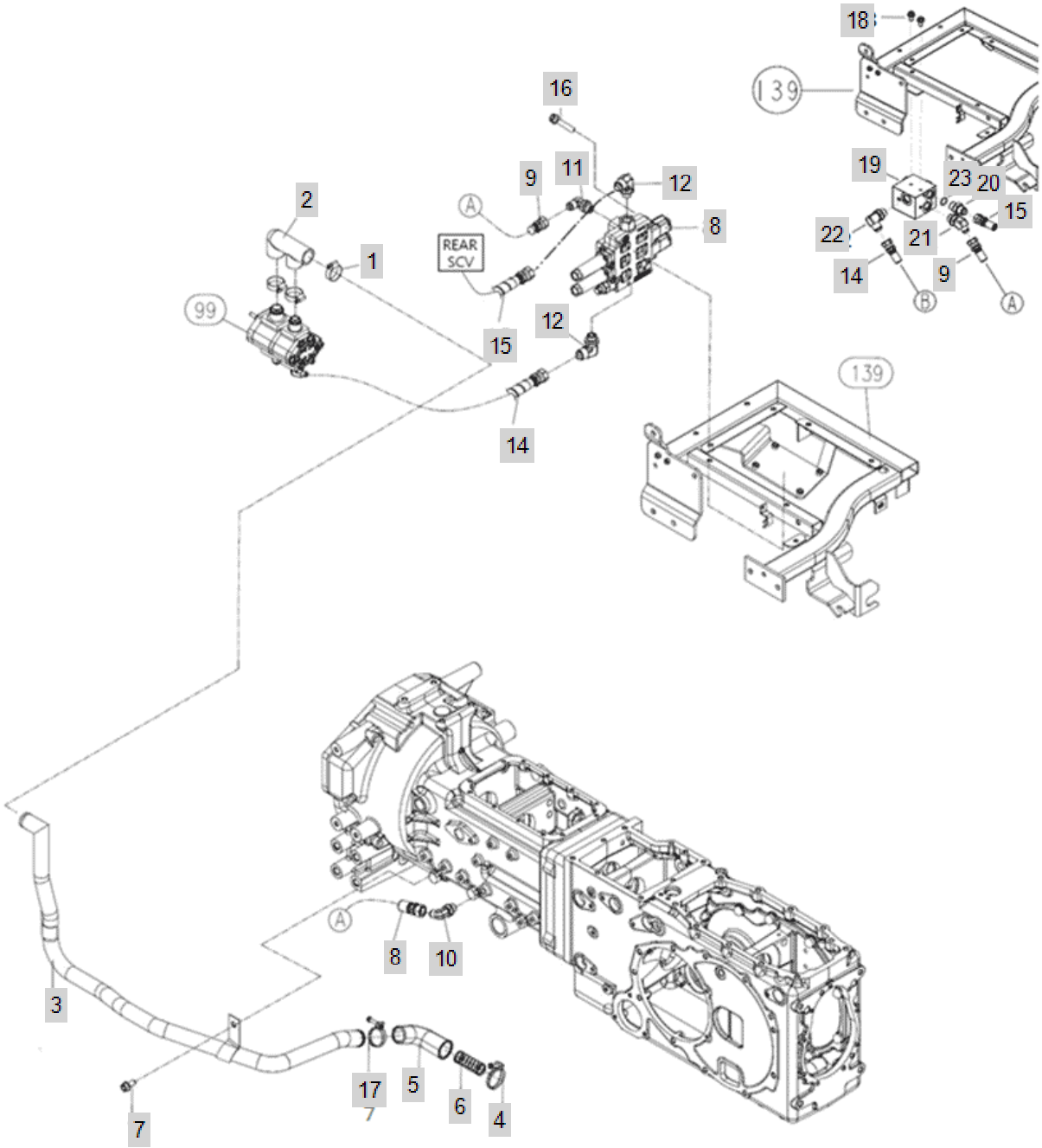

FIG C115D-3 4520R(2014~)	HYD PIPING	Year/Month 2020/02

KeyNo.	Part Number	Part Name	Quantity	Other
1	23000-041000	HOSECLAMP	3	
2	FBB4510000A3	HOSE, LOWER PRESSURE	1	
3	TA00036220D	PIPE ASS'Y, LOWER PRESSURE	1	
4	23010-044000	HOSEBAND	1	
5	TA00017333A	HOSE, LOW PRESSURE	1	
6	TTB4360000A4	SPRINGA	2	
7	26106-080202	SQR FLANGE BOLT	1	
8	TA00056772A	SCV ASS'Y_R	1	
8-1	TA00026056B	FRONT REMOTE VALVE	1	delete
9	TA00030012A	HOSE	1	
10	TA00018066A	LOCK NUT ELBOW 90D 3/8-1/4	1	
11	TA00035078A	ELBOW	1	
11-1	TA00022104B	ELBOW (M18XP1.5_PF3/8)	1	
12	CEE4050000A	ELBOW(3/8)	2	
12-1	TA00026065A	ELBOW 90 3/8-1/2	2	
14	TA00001408B	HIGH PRESSURE HOSE 1/2" (F)	1	
15	TA00034077A	RUBBER HOSE,HIGH PRESSURE	1	
16	26106-080602	SCREW,HEXFLANGEHEADCAP	3	
17	TA00045083A	HOSE BAND	1	
18	26106-080162	SCREW,HEXFLANGEHEADCAP	2	
19	TA00039335A	VALVE, FRONT	1	
20	CVE4020000A4	NIPPLE	1	
21	FB34060000A4	ELBOW	1	
22	TA00039579A	ELBOW	1	
23	24311-000180	O-RING, DYNAMIC (Φ18)	1	

FIG C118 4520R(2014~)	HYD Filter	Year/Month 2020/02

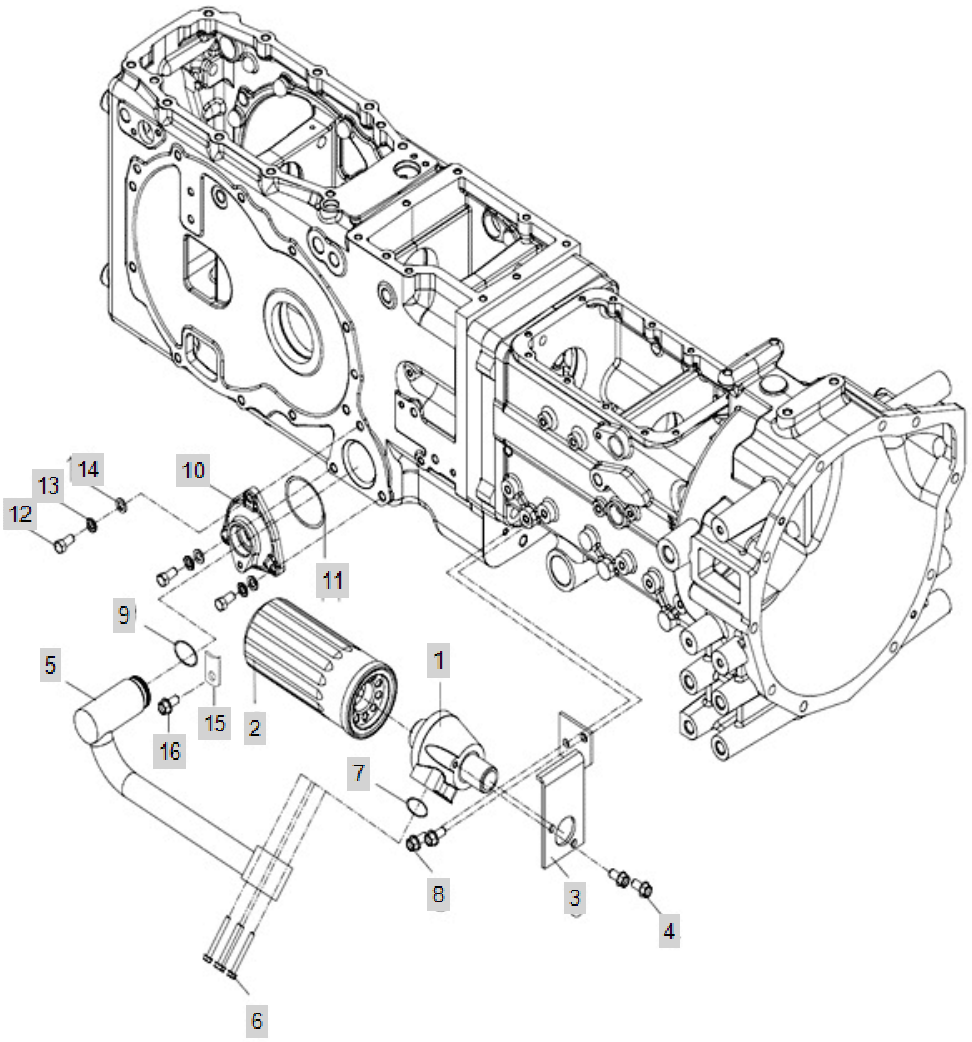

FIG C118 4520R(2014~)	HYD Filter	Year/Month 2020/02

KeyNo.	Part Number	Part Name	Quantity	Other
1	TTB8020011A3	COVER: FILTER	1	
2	TA00025525A	FILTER, HYD OIL (20R/20C SERIES)	1	
3	TA00036028A	FILTER BRACKET	1	
4	26106-080162	SCREW,HEXFLANGEHEADCAP	2	
5	TA00036031A	PIPE ASS'Y,LOWER PRESSURE	1	
6	26106-060552	HEX FLANGE BOLT	4	
7	24321-000250	O-RING	1	
8	26106-100202	HEX BOLT, (10-20)	2	
9	24311-000320	O-RING, DYNAMIC (Φ32)	1	
10	TA00000916A	SCREEN COVER (LH)	1	
11	24321-000850	ORING(G85)	2	
12	26116-080252	BOLT7T(8X25)	3	
13	22217-080000	WASHER, SPRING (Φ 08)	3	
14	22137-080000	WASHER, PLAIN (Φ 08)	3	
15	TTB4100000A4	PLATE	1	
16	26106-080162	SCREW,HEXFLANGEHEADCAP	1	

FIG C119-1 4520R(2014~)	Electric_Wiring(~2015)	Year/Month 2020/02

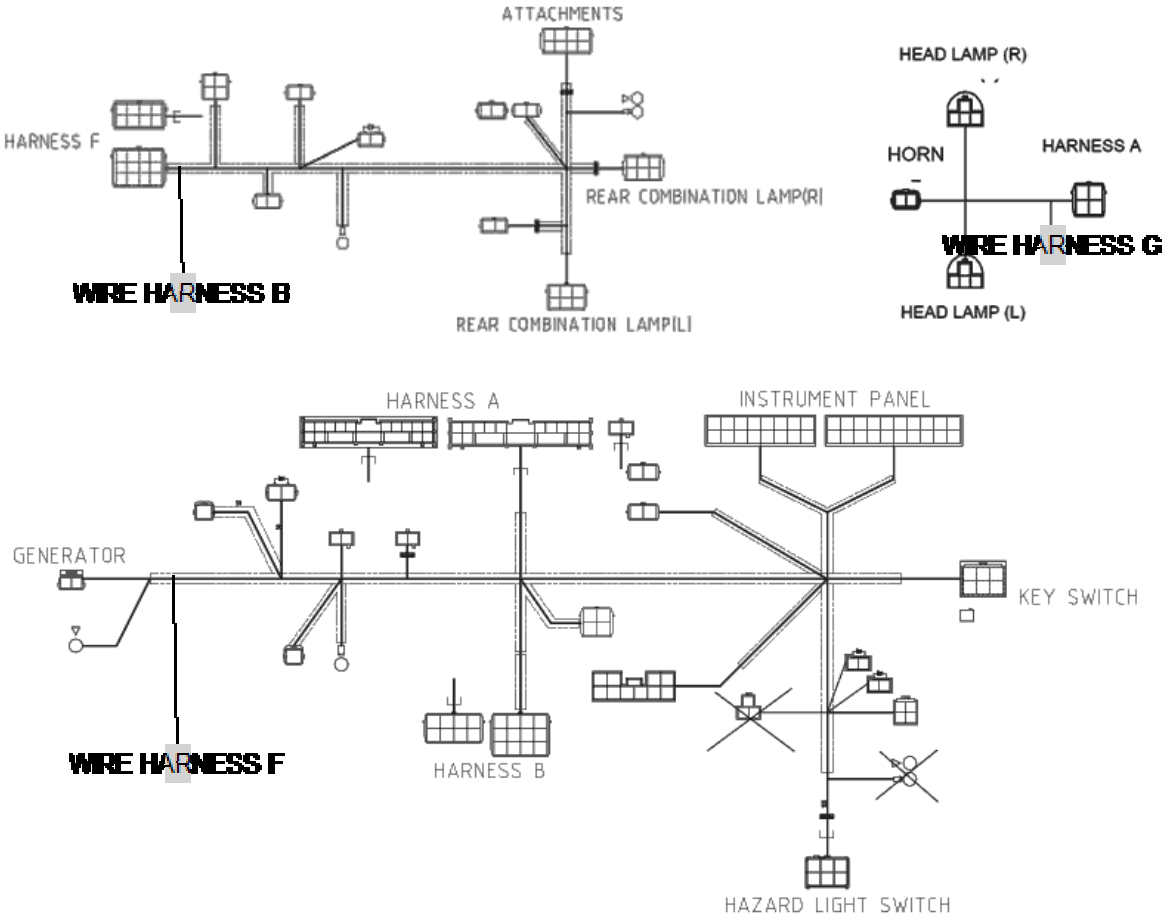

FIG C119-1 4520R(2014~)	Electric_Wiring(~2015)	Year/Month 2020/02

KeyNo.	Part Number	Part Name	Quantity	Other
Key	PART NO	Part Name	A	
WIRE HARNESS B	HA00000217B	WIRE HARNESS B	1	
WIRE HARNESS G	HA00000411A	HARNESS G	1	
WIRE HARNESS F	HA00000218B	WIRE HARNESS F	1	
WIRE HARNESS A	HA00000540A	HARNESS A	1	
5	26716-060002	HEX NUT (Φ6)	4	
14	TTB9140000A9	FUSE5A	3	
15	TTB9150000A9	FUSE10A	4	
16	CEH3170500A4	FUSE 20A	5	
30	CEH3160000A3		2	
37	HA00000414B	BATTERY CABLE (+)	1	
38	HA00000415A	BATTERY CABLE (-)	1	
39	TB39260000A4	BAND	6	
42	TTB9420000A4	Band, Wire (250mm)	10	
43	CEH3370000A4	NYLON BAND 350	1	
44	HA00000454A	TRAILERSOCKET	1	
45	26557-060352	SCREW,+GROOVE	3	
49	TTB9490000A4	TAPPINGSCREW	4	
51	22137-060000	WASHER , PLAIN	1	
53	26106-060122	HEX BOLT (6-12)	3	
54	26106-060162	HEXFLANGEBOLT	4	
64	TTB9640000A4	RUBBERCOVER	1	
65	26347-060002	NUT6	1	
66	26106-060162	HEXFLANGEBOLT	1	
71	22217-060000	WASHER, SPRING (Φ 06)	4	
78	CQH3120000A4	WIRE HARNESS H	1	
79	26716-050002	Nut, Hexa (Φ5)	1	

FIG C119-2 4520R(2014~)	ELE'C WIRING	Year/Month 2020/02

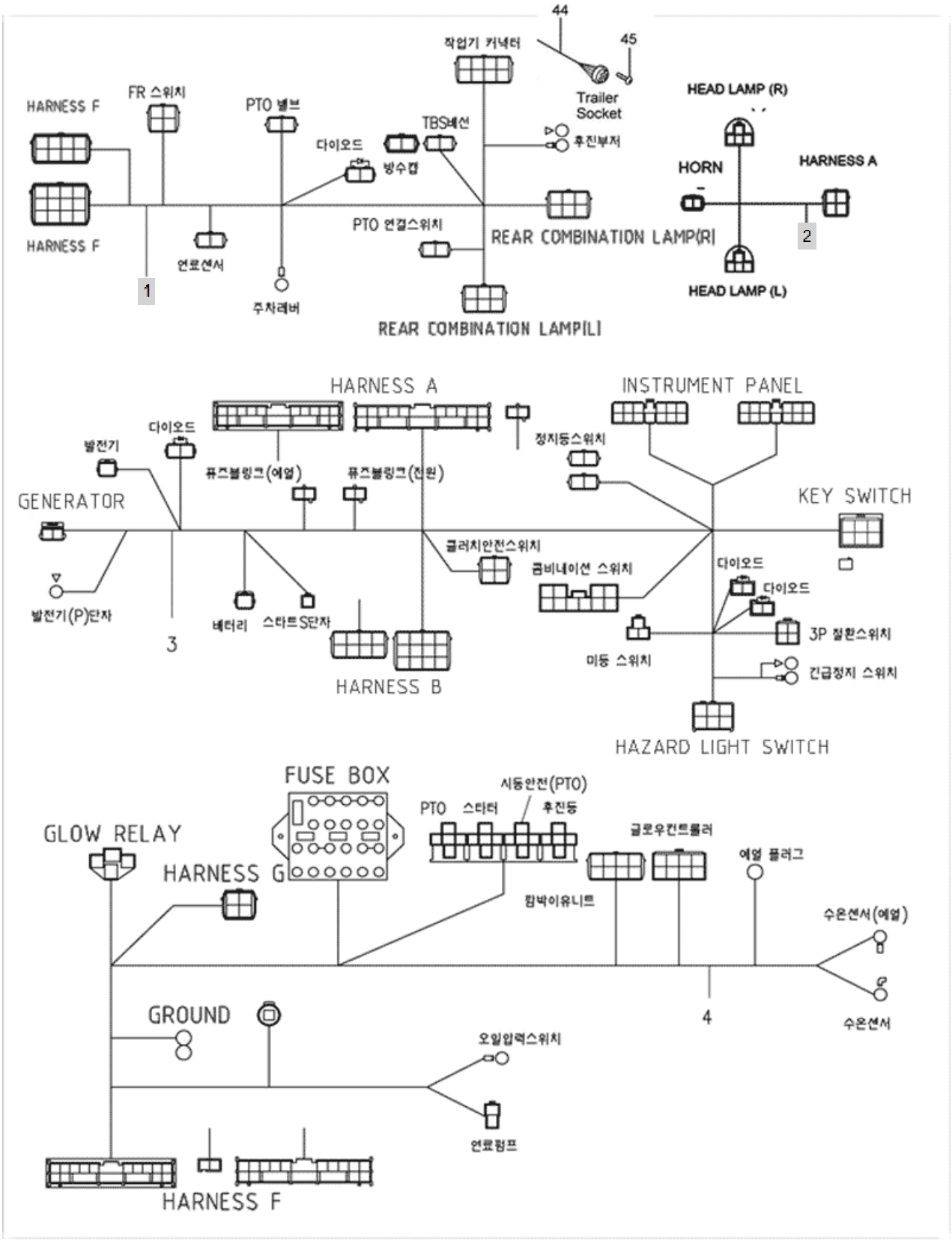

FIG C119-2 4520R(2014~)	ELE'C WIRING	Year/Month 2020/02

KeyNo.	Part Number	Part Name	Quantity	Other
1	HA00001069A	HARNESS	1	
1-1	HA00001057A	HARNESS	1	tier-3/DPF LOGGER (NO)
2	HA00000411A	HARNESS G	1	
5	26716-060002	HEX NUT (Φ6)	4	
14	TTB9140000A9	FUSE5A	6	
15	TTB9150000A9	FUSE10A	4	
16	CEH3170500A4	FUSE 20A	5	
30	CEH3160000A3		2	
37	HA00000414B	BATTERY CABLE (+)	1	
38	HA00000415A	BATTERY CABLE (-)	1	
39	TB39260000A4	BAND	6	
42	TTB9420000A4	Band, Wire (250mm)	10	
43	CEH3370000A4	NYLON BAND 350	1	
49	TTB9490000A4	TAPPINGSCREW	4	
51	22137-060000	WASHER , PLAIN	1	
53	26106-060122	HEX BOLT (6-12)	3	
54	26106-060162	HEXFLANGEBOLT	4	
64	TTB9640000A4	RUBBERCOVER	1	
65	26347-060002	NUT6	1	
66	26106-060162	HEXFLANGEBOLT	1	
71	22217-060000	WASHER, SPRING (Φ 06)	4	
78	CQH3120000A4	WIRE HARNESS H	1	
79	26716-050002	Nut, Hexa (Φ5)	1	

FIG C124 4520R(2014~)	Battery	Year/Month 2020/02

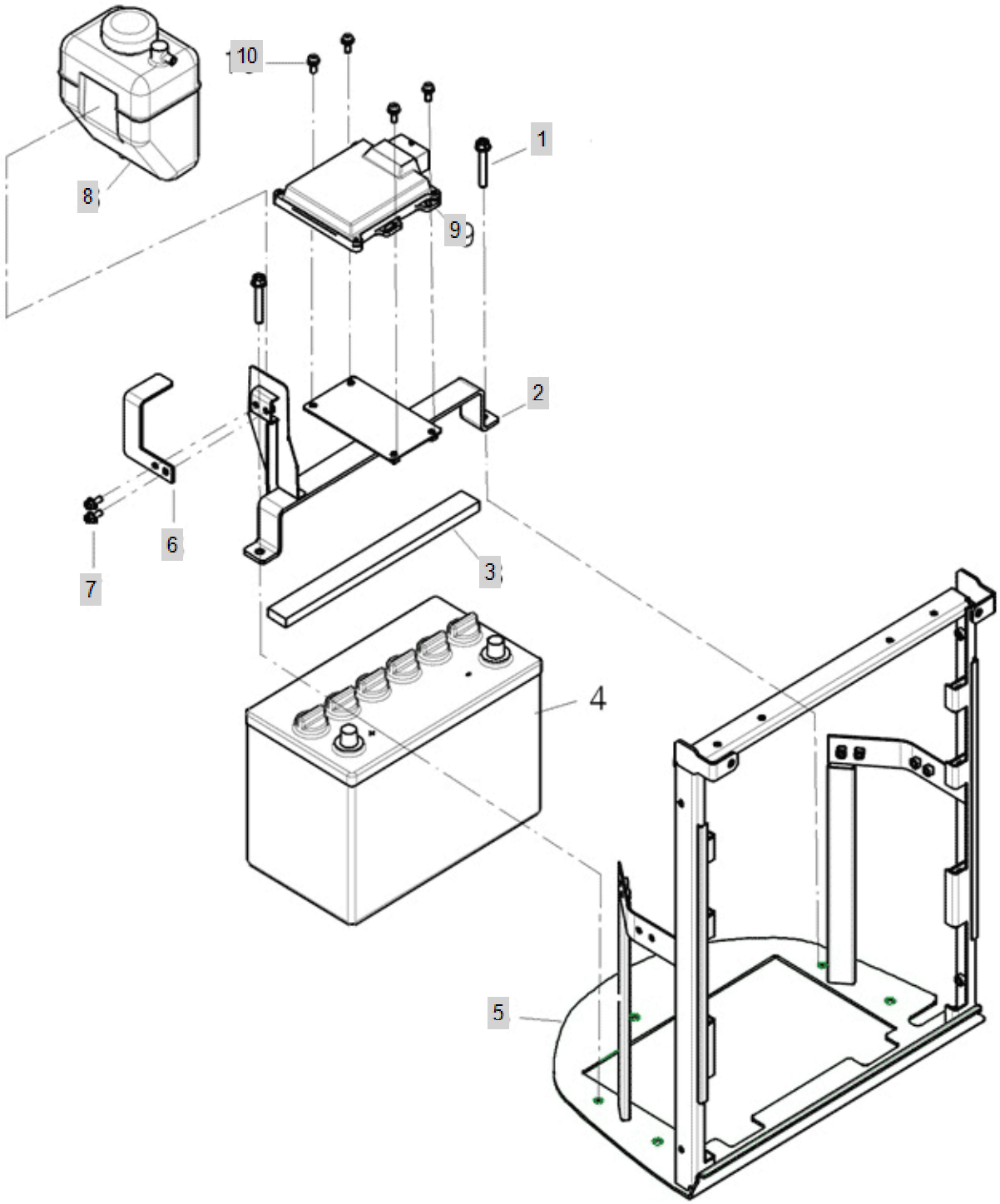

FIG C124 4520R(2014~)	Battery	Year/Month 2020/02

KeyNo.	Part Number	Part Name	Quantity	Other
1	26106-080502	SCREW,HEXFLANGEHEADCAP	2	
2	TA00035177C	BATTERY BRACKET	1	
3	TA00024221A	PAD, BATTERY BRACKET	1	
5	TA00025520D	FRAME ASS'Y GRILL	1	
6	TA00036528A	BRACKET	1	
7	26106-060142	BOLT	2	
8	TA00023608B	RESERVOIR TANK, COOLING WATER	1	
9	EA00003292A	DPF LOGGER	1	
10	26023-060162	Screw, (6-16)	4	

FIG C125-1 4520R(2014~)	Switch	Year/Month 2020/02

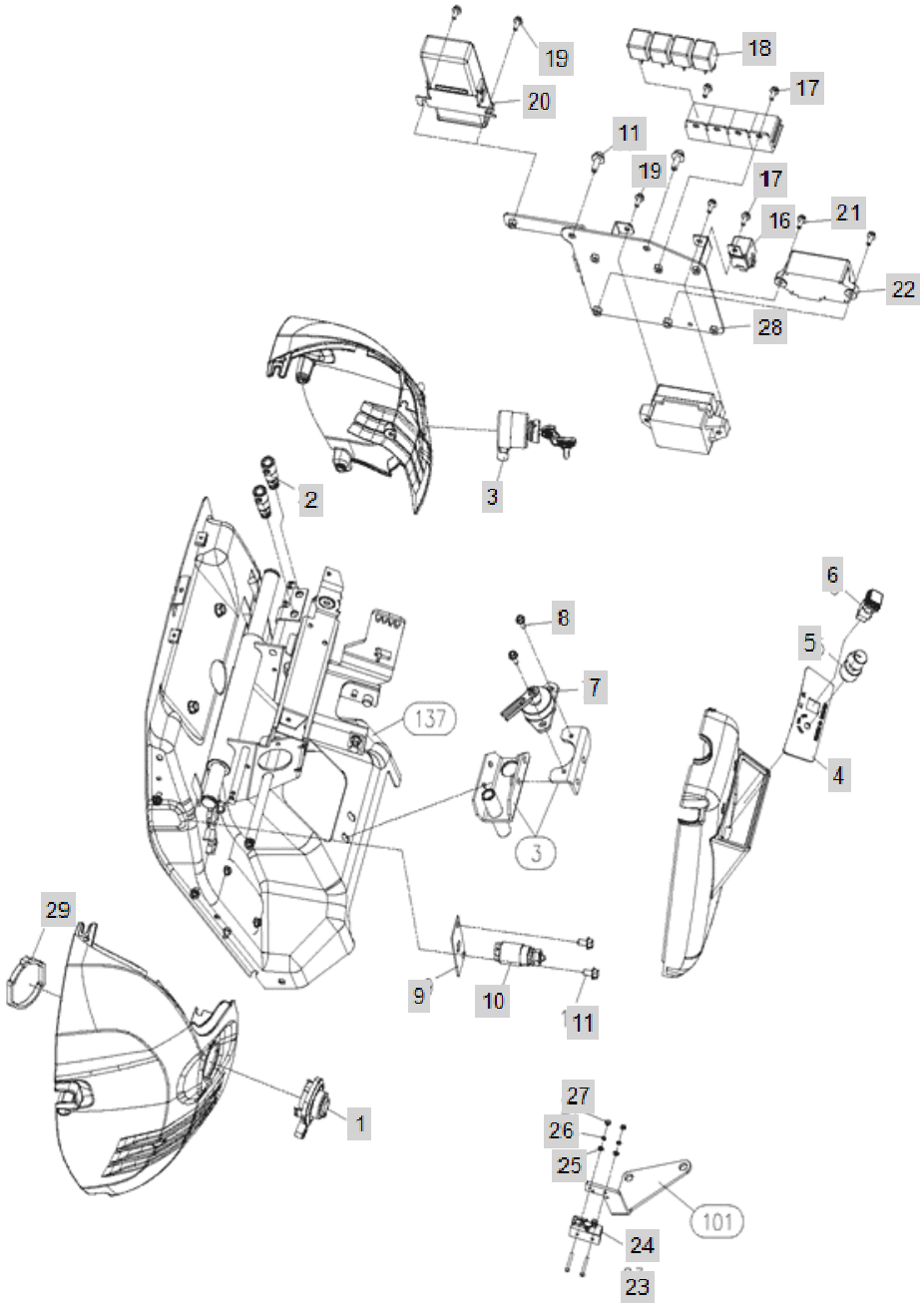

FIG C125-1 4520R(2014~)	Switch	Year/Month 2020/02

KeyNo.	Part Number	Part Name	Quantity	Other
1	HA00000067A	COMBINATION SWITCH	1	
2	TZC5110000A3	STOPLAMPSWITCH	2	
3	TTC5030000B3	STARTERSWITCHASS'Y	1	
4	TA00002731B	PANNEL	1	
5	HA00000467A	4WD S/W(NF)	1	
6	HA00001310A	HAZARD S/W	0	
6-1	FTC5340000A3	EMERGENCY LAMP SWITCH	1	
7	TCD9110000B2	SWITCH ASS'Y	1	
8	26106-060162	HEXFLANGEBOLT	2	
9	TA00018456A	SWITCH PLATE	1	
10	HA00000361A	SWITCH,SAFETY	1	
11	26106-080162	SCREW,HEXFLANGEHEADCAP	4	
16	FTB9160000A3	GLOW RELAY (12V-70A)	1	
17	26106-050142	HEX FLANGE BOLT (5-14)	3	
18	FTC5130000A3	RELAY(5P)	4	
19	26106-060122	HEX BOLT (6-12)	4	
20	HRB1801002A2	Q.G.S CONTROLLER	1	
21	26106-060222	HEX FLANGE BOLT	2	
22	NTC5510000A3	FLASH RELAY	1	
23	26557-040452	+ SMALL BOLT	2	
24	FTC5110000A3	SWITCH, PTO CONNECT	2	
25	22137-040000	WASHER, PLAIN (Φ 04)	2	
26	22217-040000	WASHER, SPRING (Φ 04)	2	
27	26716-040002	HEXNUT	2	
28	TA00034878A	BRACKET, ELEC	1	
29	TA00024270A	HOLDER, COMBINATION SWITCH	1	

FIG C125-2 4520R(2014~)	SWITCH(2016.03)	Year/Month 2020/02

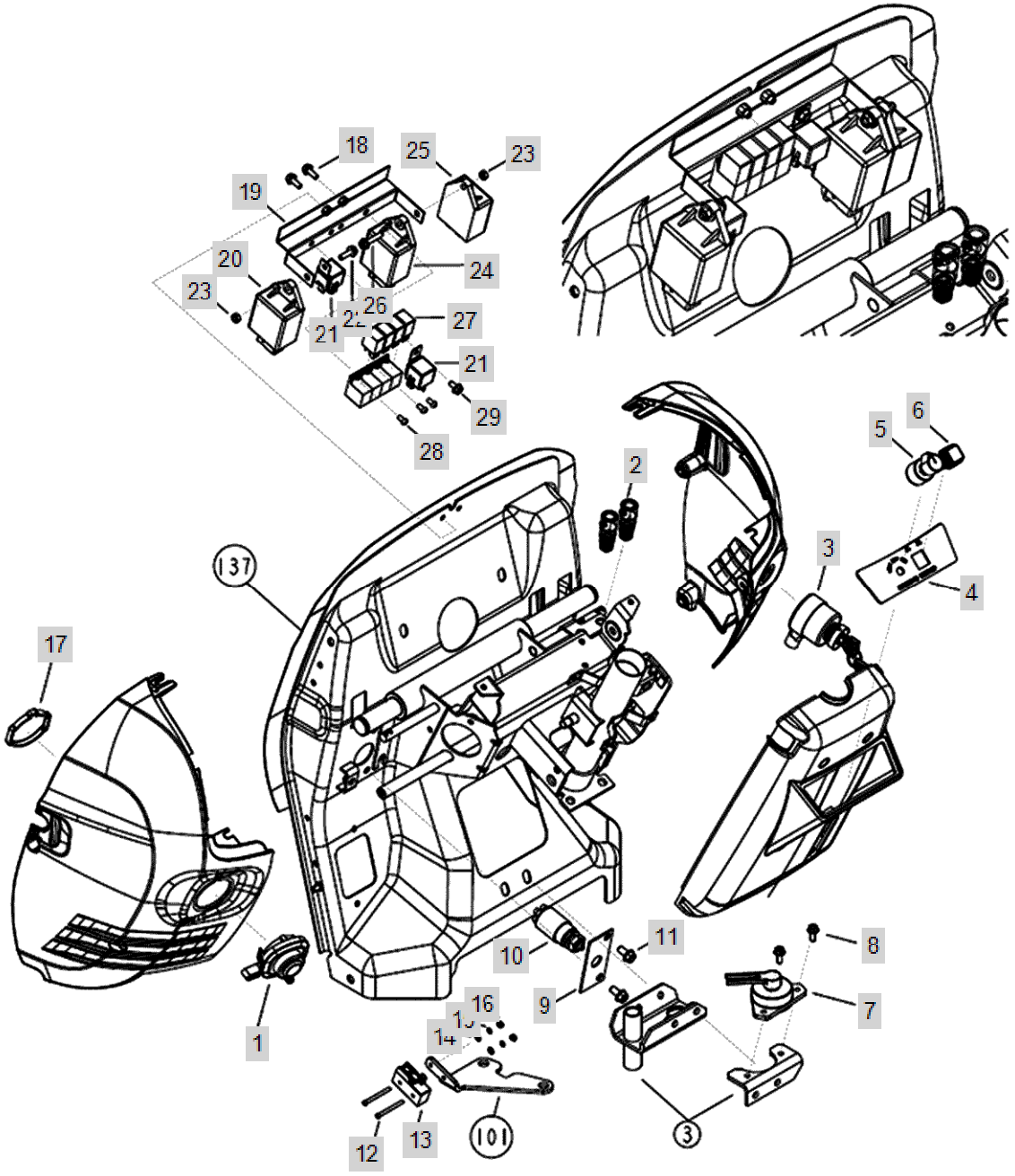

FIG C125-2 4520R(2014~)	SWITCH(2016.03)	Year/Month 2020/02

KeyNo.	Part Number	Part Name	Quantity	Other
1	HA00000067A	COMBINATION SWITCH	1	
2	TZC5110000A3	STOPLAMPSWITCH	2	
3	TTC5030000B3	STARTERSWITCHASS'Y	1	
4	TA00002731B	PANNEL	1	
5	HA00000467A	4WD S/W(NF)	1	
6	HA00001310A	HAZARD S/W	1	
6-1	FTC5340000A3	EMERGENCY LAMP SWITCH	1	delete
7	TCD9110000B2	SWITCH ASS'Y	1	
8	26106-060162	HEXFLANGEBOLT	2	
9	TA00018456A	SWITCH PLATE	1	
10	HA00000361A	SWITCH,SAFETY	1	
11	26106-080162	SCREW,HEXFLANGEHEADCAP	2	
12	26557-040452	+ SMALL BOLT	2	
13	FTC5110000A3	SWITCH, PTO CONNECT	1	
14	22137-040000	WASHER, PLAIN (Φ 04)	2	
15	22217-040000	WASHER, SPRING (Φ 04)	2	
16	26716-040002	HEXNUT	2	
17	TA00024270A	HOLDER, COMBINATION SWITCH	1	
18	26106-060162	HEXFLANGEBOLT	2	
19	TA00041890A	BRACKET ASS'Y(ELECTRONIC)	1	
20	HA00000976A	GLOW CONTROLLER	1	
21	FTB9160000A3	GLOW RELAY (12V-70A)	2	
22	26106-060202	HEXFLANGEBOLT	1	
23	26716-060002	HEX NUT (Φ6)	2	
24	HA00000174A	CRUISE CONTROL	1	
25	HA00000821A	FLASHER RELAY	1	
26	26106-060302	Bolt, Hexa (6-30)	1	
27	HA00000810A	MINI ISO RELAY	3	
28	26557-050102		2	
29	26106-060122	HEX BOLT (6-12)	1	

FIG C125-3 4520R(2014~)	SWITCH(2018.05)	Year/Month 2020/02

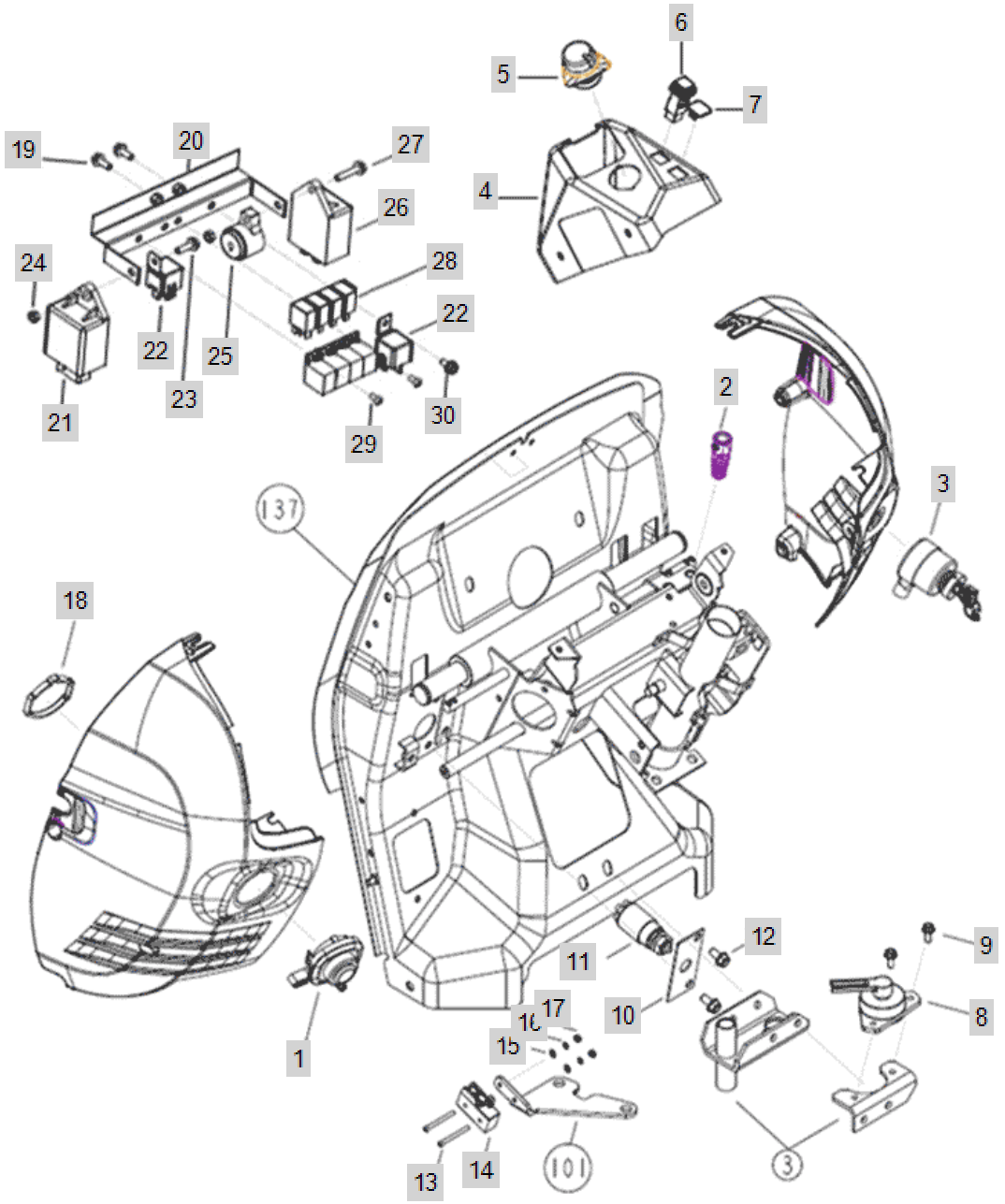

FIG C125-3 4520R(2014~)	SWITCH(2018.05)	Year/Month 2020/02

KeyNo.	Part Number	Part Name	Quantity	Other
1	HA00000067A	COMBINATION SWITCH	1	
2	TZC5110000A3	STOPLAMPSWITCH	1	
3	TTC5030000C3	IGNITION SWITCH	1	
4	TA00026232D	JOY-STICK COVE	1	
5	HA00001350A	PTO SWITCH	1	
6	FTC5340000A3	EMERGENCY LAMP SWITCH	1	
7	TA00047320A	CAP, SWITCH	1	
8	TCD9110000B2	SWITCH ASS'Y	1	
9	26106-060162	HEXFLANGEBOLT	2	
10	TA00018456A	SWITCH PLATE	1	
11	HA00000361A	SWITCH,SAFETY	1	
12	26106-080162	SCREW,HEXFLANGEHEADCAP	2	
13	26557-040452	+ SMALL BOLT	2	
14	FTC5110000A3	SWITCH, PTO CONNECT	1	
15	22137-040000	WASHER, PLAIN (Φ 04)	2	
16	22217-040000	WASHER, SPRING (Φ 04)	2	
17	26716-040002	HEXNUT	2	
18	TA00024270A	HOLDER, COMBINATION SWITCH	1	
19	26106-060162	HEXFLANGEBOLT	2	
20	TA00041890A	BRACKET ASS'Y(ELECTRONIC)	1	
21	HA00001111A	GLOW CONTROLLER	1	
22	FTB9160000A3	GLOW RELAY (12V-70A)	2	
23	26106-060202	HEXFLANGEBOLT	1	
24	26716-060002	HEX NUT (Φ6)	2	
25	RN66310000A3	Buzzer	1	
26	HA00001595A	FLASHER RELAY	1	
26-1	HA00000821A	FLASHER RELAY	1	DELETE
27	26106-060302	Bolt, Hexa (6-30)	1	
28	HA00000810A	MINI ISO RELAY	3	
29	26557-050102		2	
30	26106-060122	HEX BOLT (6-12)	1	

FIG C131 4520R(2014~)	Horn	Year/Month 2020/02

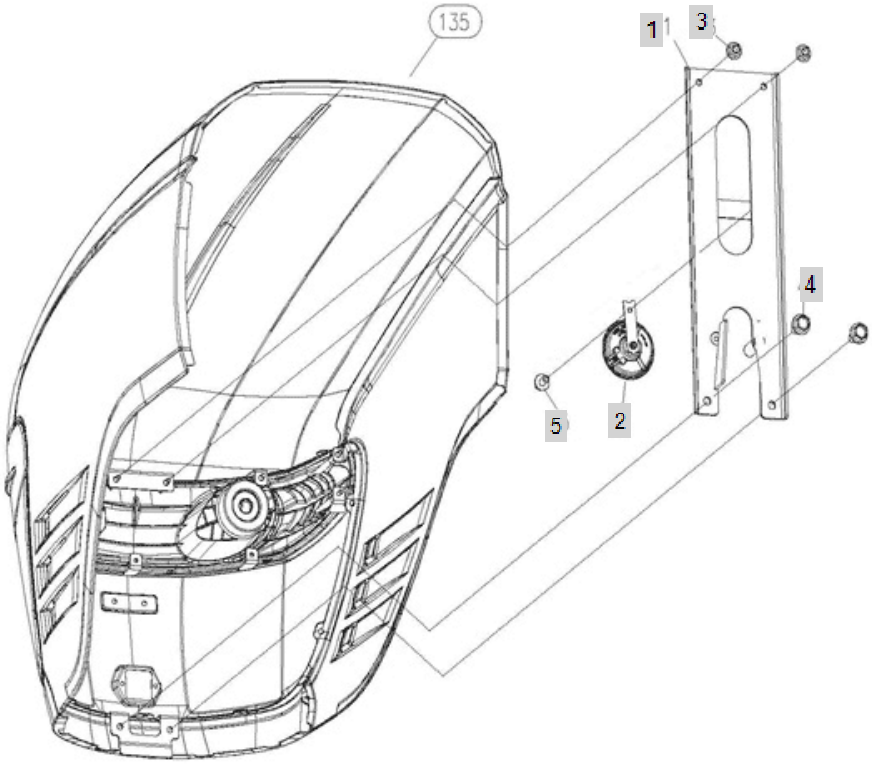

FIG C131 4520R(2014~)	Horn	Year/Month 2020/02

KeyNo.	Part Number	Part Name	Quantity	Other
1	TA00032743A	BRACKET ASSY	1	
2	HA00000929A	HORN	1	
2-1	TTD1040000B3	HORN	1	
3	26367-060002	Nut, Hexa (Φ6)	2	
4	26106-080162	SCREW,HEXFLANGEHEADCAP	2	
5	26107-060122	HEXA PLNGE BOLT	1	

FIG C132 4520R(2014~)	Lamp	Year/Month 2020/02

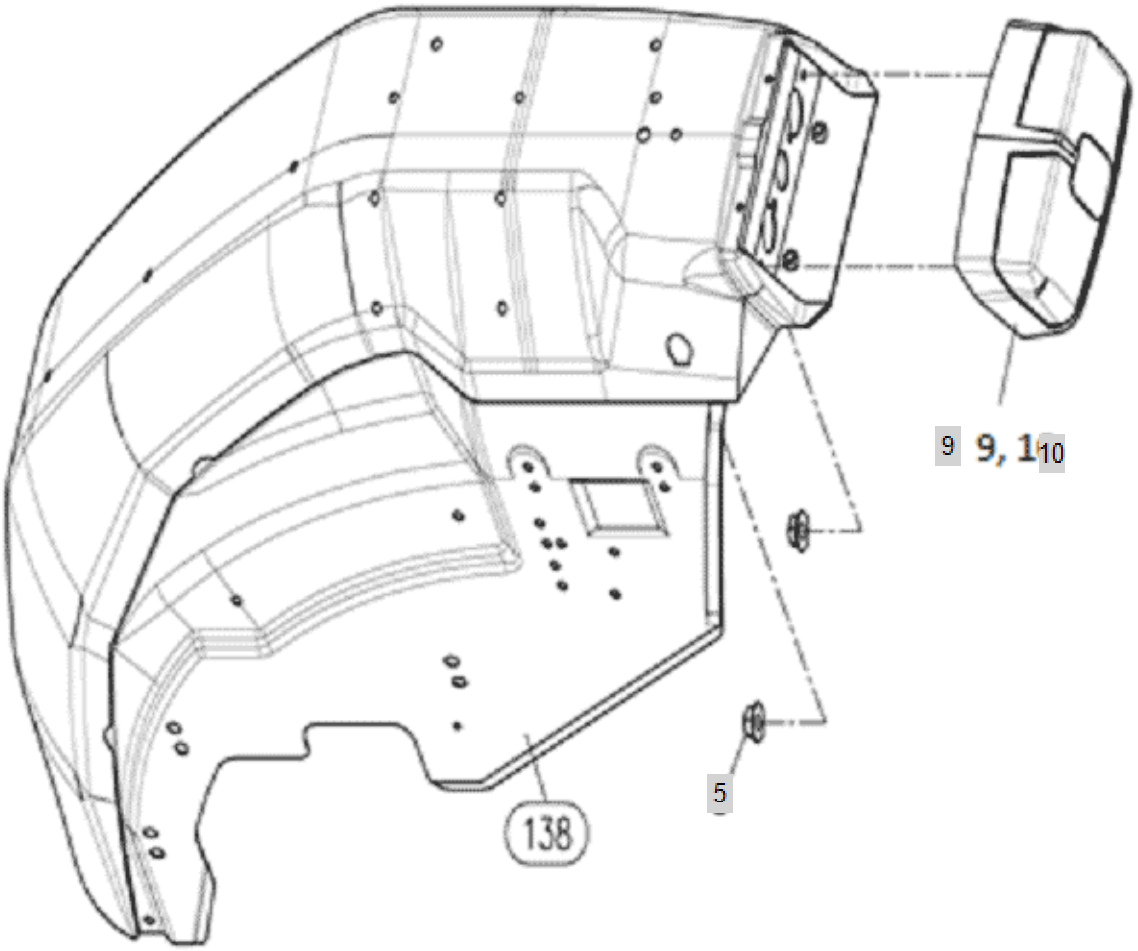

FIG C132 4520R(2014~)	Lamp	Year/Month 2020/02

KeyNo.	Part Number	Part Name	Quantity	Other
5	26367-060002	Nut, Hexa (Φ6)	0	
9	NTD2170000A3	COMBINATIONLAMP(R)	0	
10	NTD2160000A3	COMBINATIONLAMP(L)	0	

FIG C134 4520R(2014~)	Meter_Assembly	Year/Month 2020/02

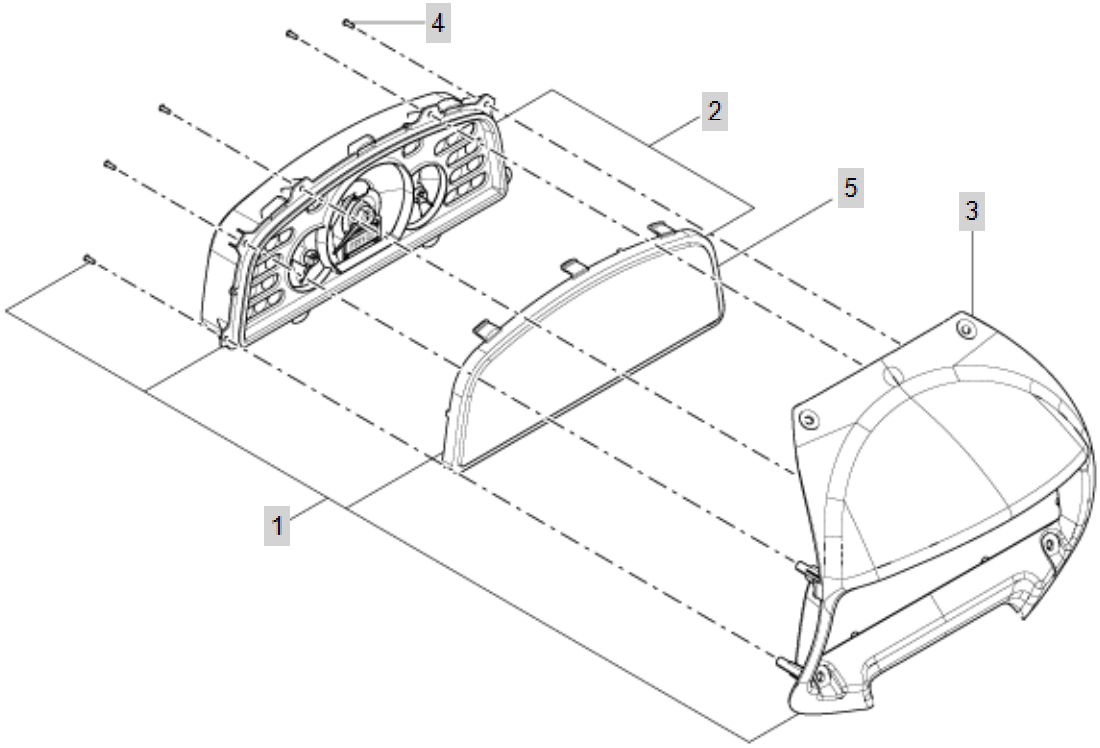

FIG C134 4520R(2014~)	Meter_Assembly	Year/Month 2020/02

KeyNo.	Part Number	Part Name	Quantity	Other
1	TA00026699D	INDICATOR ASS'Y	1	
2	HA00001412A	METER ASSY	1	
2-1	HA00000722B	METER ASSY	1	delete
3	TA00021145A	DASH BOARD UPPER (L) -> TA00021145B	1	
4	22867-400120	TAPPING SCREW 4X12	8	
4-1	22857-400120	BOLT	8	
5	HA00001174A	METER UPPER COVER	1	

FIG C135-1 4520R(2014~)	Bonnet	Year/Month 2020/02

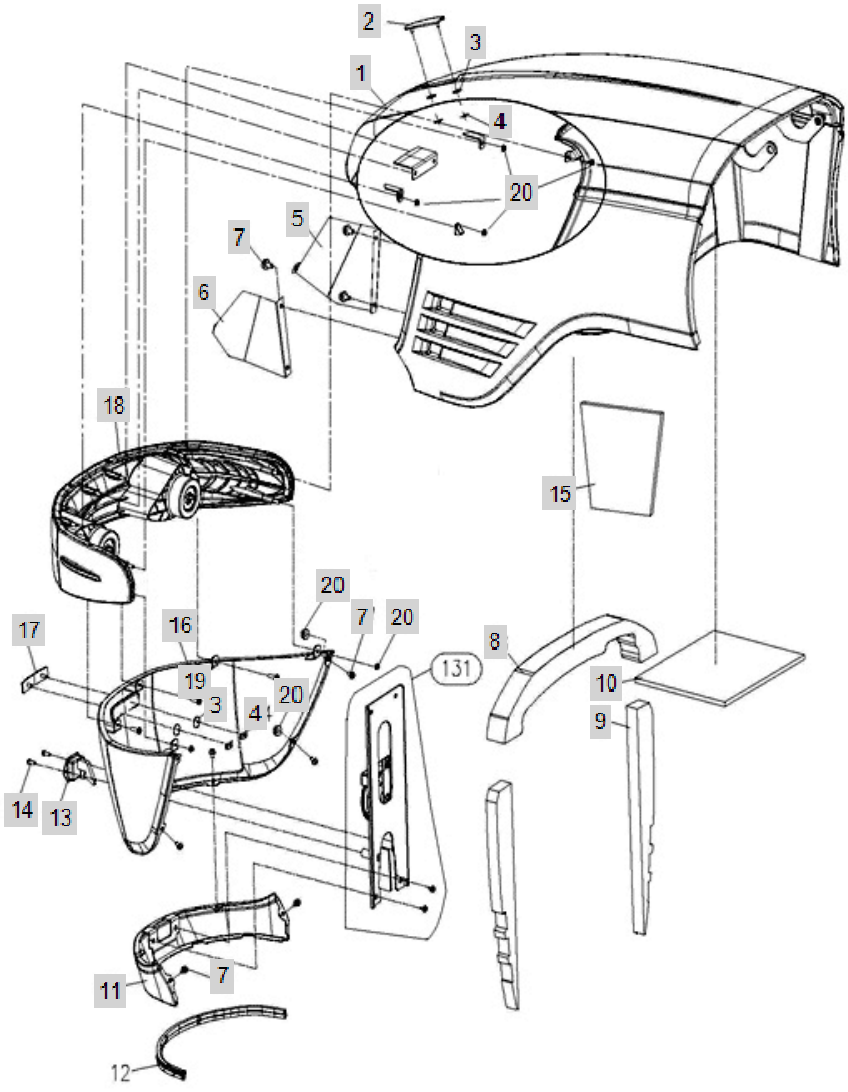

FIG C135-1 4520R(2014~)	Bonnet	Year/Month 2020/02

KeyNo.	Part Number	Part Name	Quantity	Other
1	TA00032732A	HOOD ASSY -> TA00032732B	1	
2	TA00020285A	EMBLEM	1	
3	TTD6440000A4	CUSHION, RUBBER	4	
4	TB41290000A4	NUT	4	
5	TA00045592A	WIRE NETTING ASS'Y(R)	1	
5-1	TA00022983A	WIRE NET (RH)	1	delete
6	TA00045591A	WIRE NETTING ASS'Y(L)	1	
6-1	TA00022982A	WIRE NET (LH)	1	delete
7	26106-060102	Bolt, Hexa (6-10)	10	
8	TA00036482B	SEAL	1	
8-1	TA00025656B	\	1	delete
9	TA00044322A	SEAL	2	
9-1	TA00025657B	URETHAN SEAL, HOOD -> TA00025657C	2	delete
10	TA00020835A	HEAT INSULATOR, HOOD	1	
11	TA00032740A	HOOD ASS'Y	1	
12	TA00023504B	STRIP, HOOD UNDER	1	delete
13	TA00016568B	DOOR LOCK ASSY	1	
14	TA00018918B	LENCHBOLT(M6)	2	
15	TA00020834A	HEAT INSULATOR, HOOD	1	
16	TA00032745A	FRONT GIRLL	1	
17	TA00040625A	EMBLEM	1	
17-1	TA00032739A	EMBLEM	1	delete
18	TA00032738A	HEAD LAMP ASSy (US)	1	
19	26476-050122	PLANGE HEXA BOLT	3	
20	26367-060002	Nut, Hexa (Φ6)	10	
21	TCD5310000A4	Clamp, Harness C	3	

FIG C135-2 4520R(2014~)	BONNET	Year/Month 2020/02

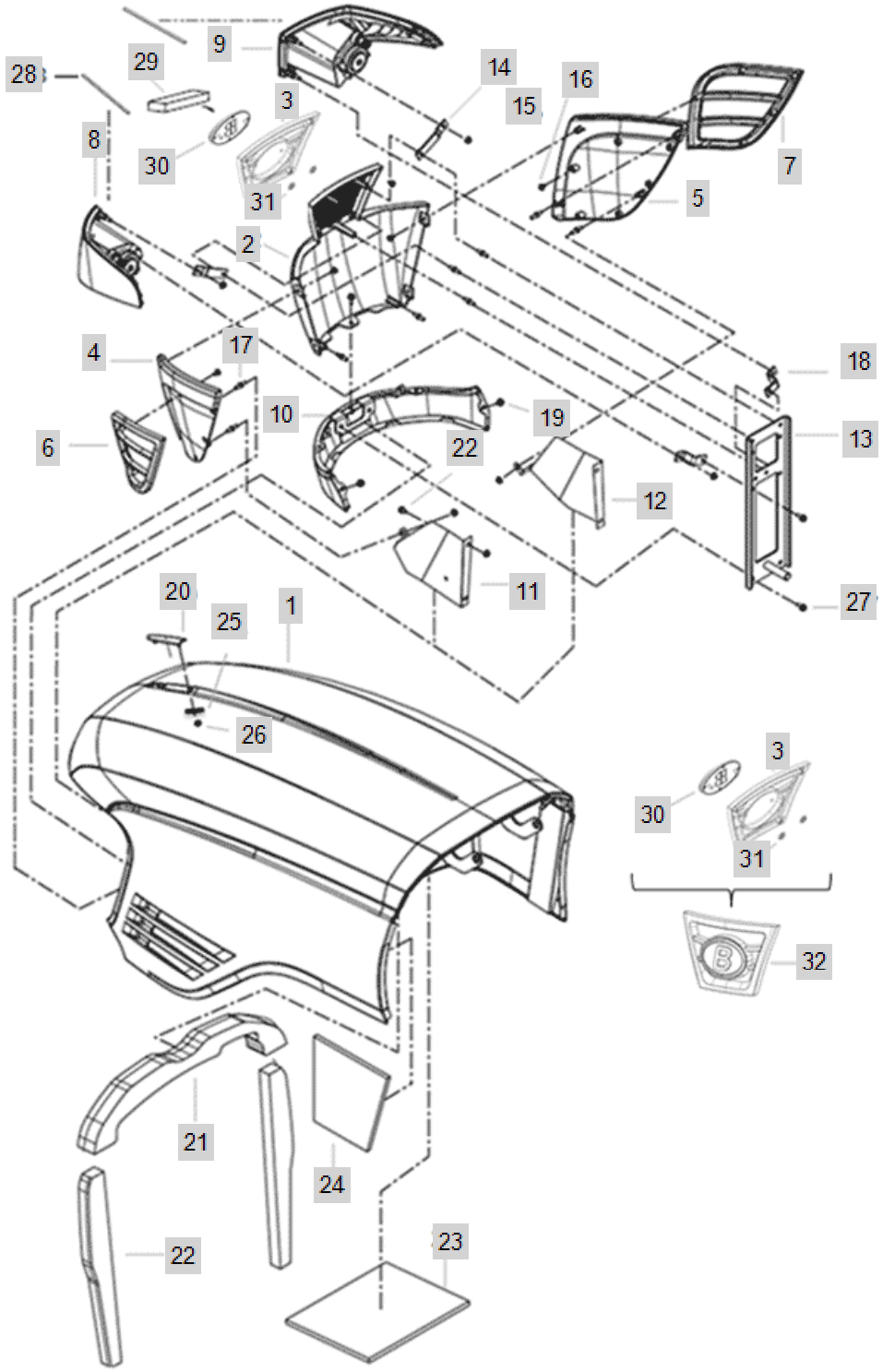

FIG C135-2 4520R(2014~)	BONNET	Year/Month 2020/02

KeyNo.	Part Number	Part Name	Quantity	Other
1	TA00043948A	BONNET FRAME ASSY	1	
2	TA00042482B	FRONT MASK, MIDDLE	1	
3	TA00052249A	GRILL, FRONT MASK	1	
4	TA00042483B	FRONT MASK, LH	1	
5	TA00042485B	FRONT MASK, RH	1	
6	TA00042484B	FRONT MASK GRIL, LH	1	
7	TA00042486B	FRONT MASK GRIL, RH	1	
8	HA00001143B	HEAD LAMP(L)	1	
9	HA00001144B	HEAD LAMP(R)	1	
10	TA00043949B	HOOD(LOWER) ASSY	1	
11	TA00044323A	WIRE NETTING ASS'Y(L)	1	
12	TA00044325A	WIRE NETTING ASS'Y(R)	1	
13	TA00042503F	BRACKET ASSY, SUPPORT	1	
14	TA00044134A	LAMP BRACKET A	2	
15	26367-060002	Nut, Hexa (Φ6)	21	
16	22587-480124	TAPPING SCREW	20	
17	TA00001332A	INSERT BOLT(M6)	17	
18	TA00044136A	LAMP BRACKET B	2	
19	26106-060162	HEXFLANGEBOLT	11	
20	TA00020285A	EMBLEM	1	
21	TA00036482B	SEAL	1	
22	TA00044322A	SEAL	2	
23	TA00020835A	HEAT INSULATOR, HOOD	1	
24	TA00020834A	HEAT INSULATOR, HOOD	1	
25	TTD6440000A2		2	
26	TB41290000A4	NUT	2	
27	26106-080162	SCREW,HEXFLANGEHEADCAP	3	
28	TA00055321A	HEADL LAMP SEAL	2	
29	TA00055322A	FRONT MASK, SEAL	1	
30	TA00052253A	EMBLEM	1	
31	FE06040000A	NUT 6, PUSH	2	
32	TA00056269A	EMBLEM ASSY	1	

FIG C136A-3 4520R(2014~)	본네트 지지대-Tier4(201903~)	Year/Month 2020/02

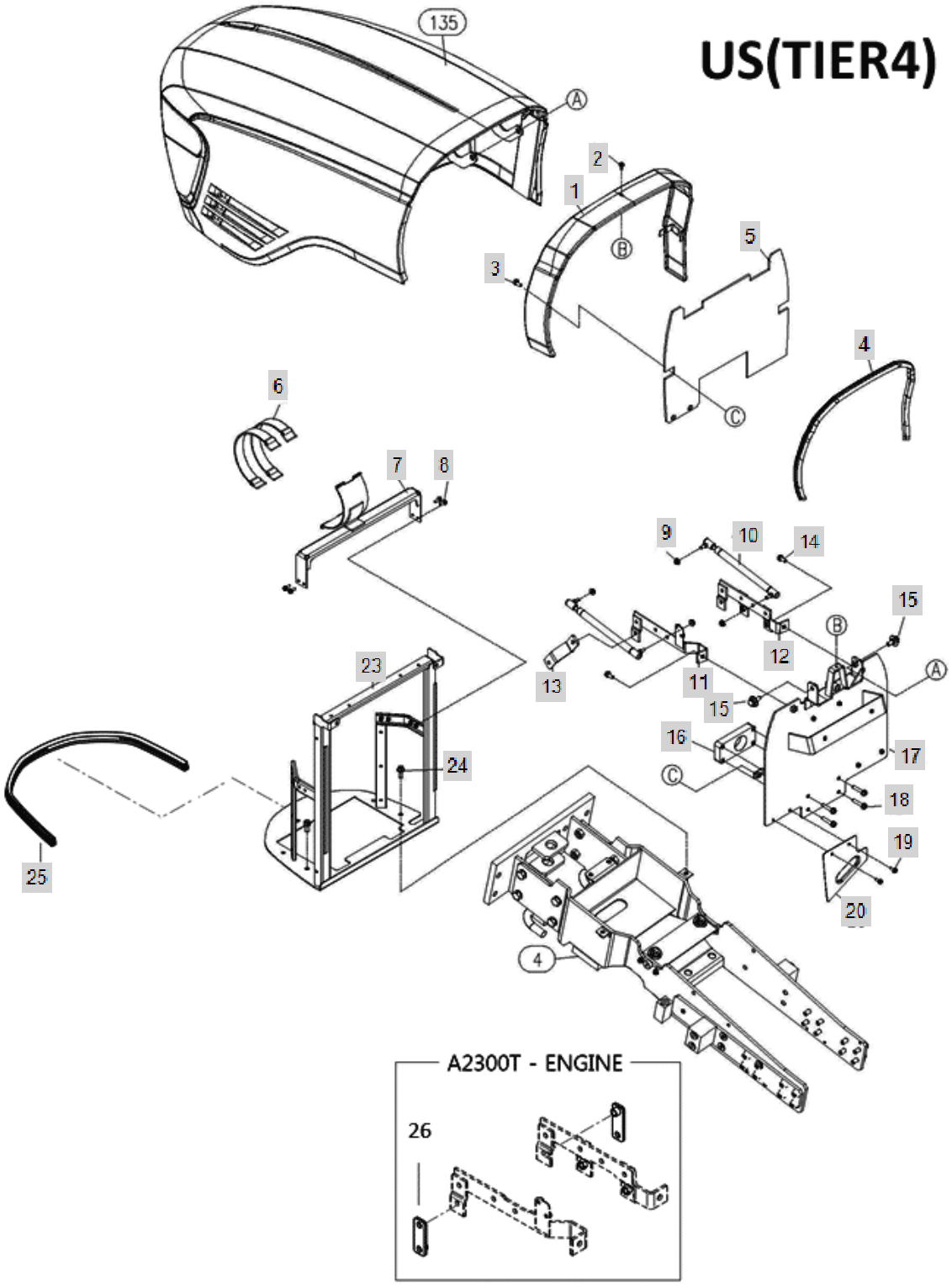

FIG C136A-3 4520R(2014~)	본네트 지지대-Tier4(201903~)	Year/Month 2020/02

KeyNo.	Part Number	Part Name	Quantity	Other
1	TA00024296D	EXTEMSION COVER	1	
2	26106-060142	BOLT	2	
3	26106-080162	SCREW,HEXFLANGEHEADCAP	14	
4	TA00033052A	STRIP	1	
5	TA00023917B	SPONGE	1	
6	TZD6890000A4	BAND,AIRCLEANERHOLDING	2	
7	TA00025580C	BRACKET AIR-CLEANER ASS'Y	1	
8	26106-060122	HEX BOLT (6-12)	4	
9	26367-080002	HEX FLANGE NUT (Φ8)	4	
10	TA00023455B	GAS SPRING	2	
11	TA00034874B	BRACKET A	1	
12	TA00034873B	BRACKET ASS'Y	1	
13	TA00035176A	BRACKET	1	
14	26106-080182	SCREW,HEXFLANGEHEADCAP	2	
15	TA00022981A	BONNET BOLT	2	
16	TA00025920A	BRACKET	1	
17	TA00029767C	BONNET SUPPORT ASM	1	
18	26106-080402	SCREW,HEXFLANGEHEADCAP	4	
19	26106-060162	HEXFLANGEBOLT	10	
20	TA00025502B	PLATE	1	
23	TA00025520F	FRAME ASS'Y GRILL	1	
24	26106-100202	HEX BOLT, (10-20)	4	
25	TA00038101A	STRIP	1	
27	22137-060000	WASHER , PLAIN	1	
28	26106-080162	SCREW,HEXFLANGEHEADCAP	2	
29	26106-100202	HEX BOLT, (10-20)	2	
30	RR47070000B4	PIN 6, COME-OFF SNAP	1	
31	TA00053140A	LATCH ASSY	1	
32	TA00053544A	LATCH BRACKET	1	
33	TA00058562A	LOAD	1	
34	TA00046742B	GRILL FRAME ASSY	1	

FIG C137 4520R(2014~)	Dash_Board	Year/Month 2020/02

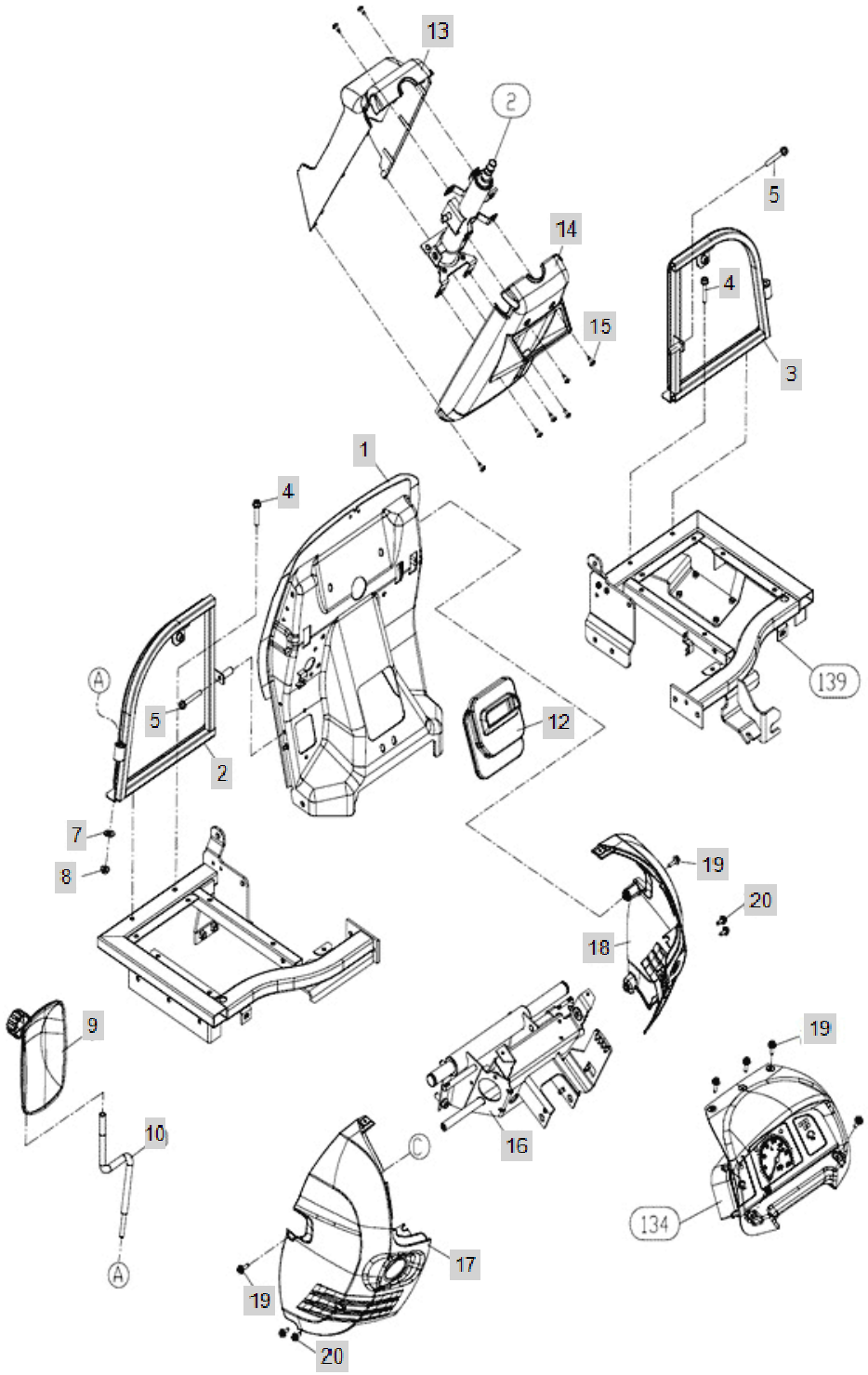

FIG C137 4520R(2014~)	Dash_Board	Year/Month 2020/02

KeyNo.	Part Number	Part Name	Quantity	Other
1	TA00027847B	ASS'Y PLATE	1	
2	TA00026276A	WINDSHIELD LH	1	
3	TA00026281A	WINDSHIELD RH	1	
4	26106-080452	HEX FLANGE BOLT 8X45	4	
5	26106-080532	HEX FLANGE BOLT	2	
7	TT01140000A4	SPRINGWASHER	1	
8	26367-100002	NUT,HEXAGONFLANGE	1	
9	TCF5170000A3	SIDE MIRROR	1	
10	NTD716E000B3	BACKMIRROR,STAY	1	
12	TA00002039A	PST BOOT	1	
13	TA00023577A	COLUMN COVER(FRONT)	1	
14	TA00023578A	COLUMN COVER(REAR)	1	
15	TTD7090000A4	CROSSRECESSEDHEADTAPPINGSCREW	8	
16	TA00025460E	COLUMN STAY ASS'Y	1	
17	TA00021143A	DASH BOARD L -> TA00032771A	1	
18	TA00021144A	DASH BOARD (R) -> TA00032772A	1	
19	TCE9020000A4	BOLT(BC)	6	
20	TCE9010000A4	BOLT	4	

FIG C138-1 4520R(2014~)	Fender	Year/Month 2020/02

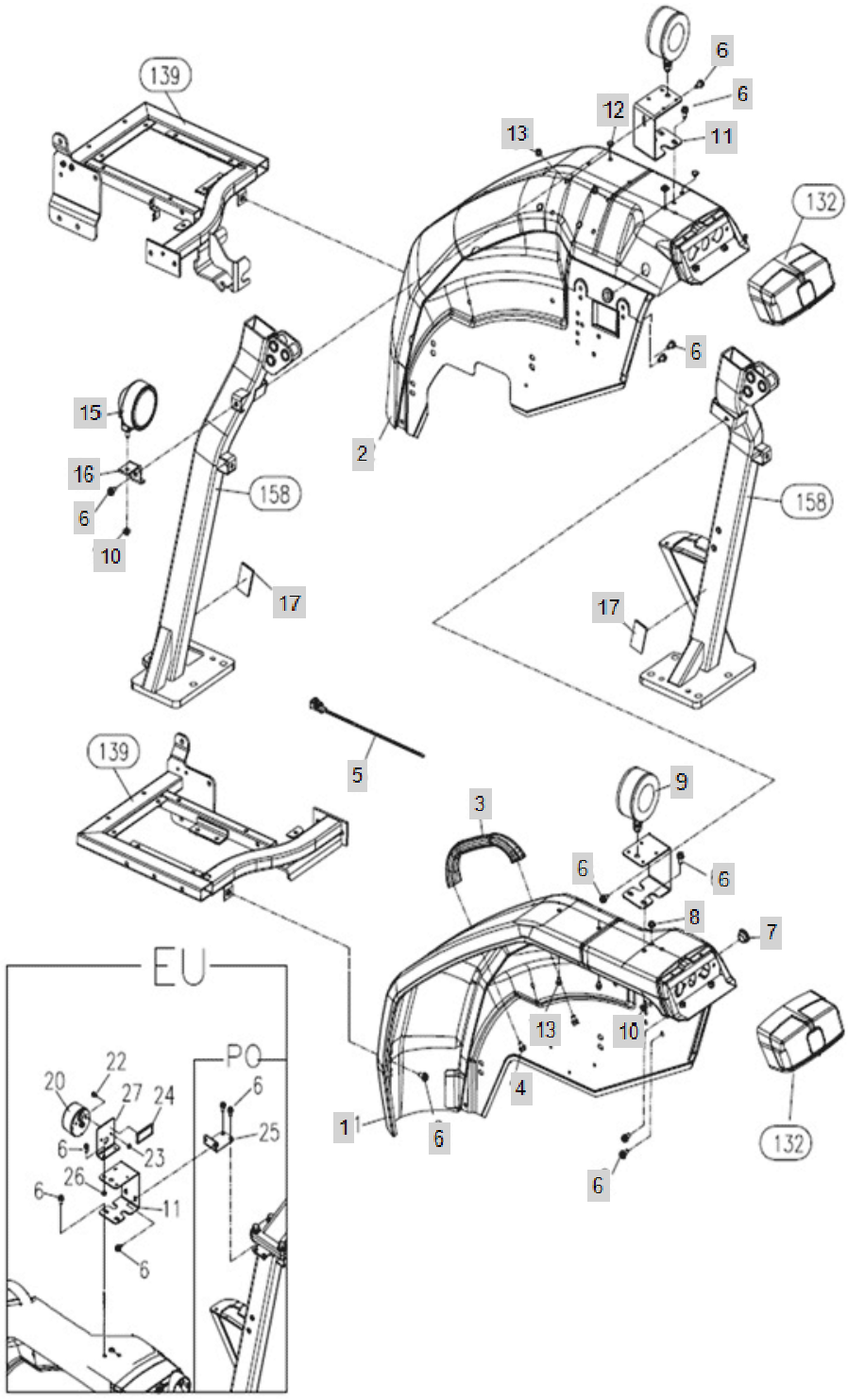

FIG C138-1 4520R(2014~)	Fender	Year/Month 2020/02

KeyNo.	Part Number	Part Name	Quantity	Other
1	TA00000670E	FENDER (LH) 20R SERIES	1	
2	TA00000675F	FENDER (RH) 20R SERIES	1	
3	NTD8120000A3	FENDERGRIP	1	
4	26106-080122	Bolt, Hexa (8-12)	2	
5	TTB9420000A4	Band, Wire (250mm)	4	
6	26106-080162	SCREW,HEXFLANGEHEADCAP	18	
7	TTB9280000A4	GROMMET25/18	2	
8	TB40280000A4	GROMET 8	2	
9	TZD2120000B3	DIRECTIONI LAMP	2	
10	26367-080002	HEX FLANGE NUT (Φ8)	2	
11	TA00032150A	SUPPORT	2	
12	TTD6650000A4	RUBBER	8	
13	26106-060102	Bolt, Hexa (6-10)	4	
15	CEG6250000A2	Lamp Ass'y, Working	1	
16	NTD8400000A	WORK LIGHT BRACKET	1	
17	FT06250000B	PAD	2	
20	FBE113000EB3	COMBINATION LAMP	2	
21	TA00016609A	BRACKET	2	
22	26106-050142	HEX FLANGE BOLT (5-14)	4	
23	26367-050002	HEX FLANGE NUT Φ5)	4	
24	FBD220000EA4	REFLECTOR	2	
25	TA00030118A	FENDER FIX BRACKET ASSM	2	
26	26367-060002	Nut, Hexa (Φ6)	4	
27	TA00032151A	BRACKET	2	

FIG C138-2 4520R(2014~)	Fender	Year/Month 2020/02

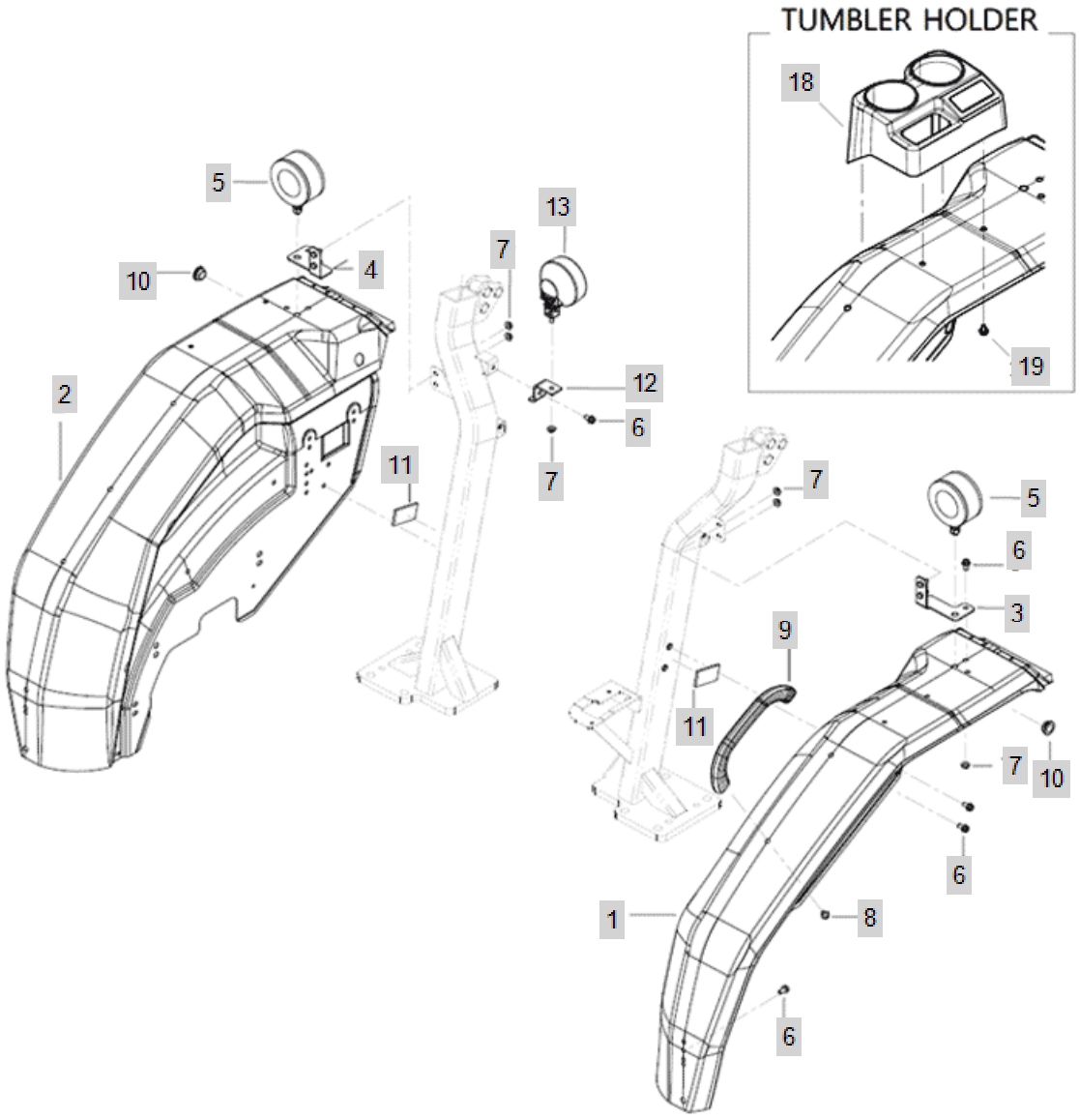

FIG C138-2 4520R(2014~)	Fender	Year/Month 2020/02

KeyNo.	Part Number	Part Name	Quantity	Other
1	TA00000670F	FENDER L ASS'Y	1	
2	TA00000675H	FENDER R ASS'Y	1	
3	TA00047141B	BRACKET ASSY	1	
4	TA00047142B	BRACKET ASSY	1	
5	HA00001224A	FLASH LAMP	2	
6	26106-080162	SCREW,HEXFLANGEHEADCAP	9	
7	26367-080002	HEX FLANGE NUT (Φ8)	7	
8	26106-080122	Bolt, Hexa (8-12)	2	
9	NTD8120000A3	FENDERGRIP	1	
10	TTB9280000A4	GROMMET25/18	2	
11	FT06250000B4	TANK BRACKET PAD	2	
12	NTD8400000B4	BRACKET	1	
13	CEG6250000A2	Lamp Ass'y, Working	1	
18	TA00019128C	CUP HOLDER	4	
19	26106-060102	Bolt, Hexa (6-10)	1	

FIG C139 4520R(2014~)	Foot_Rest_Assembly	Year/Month 2020/02

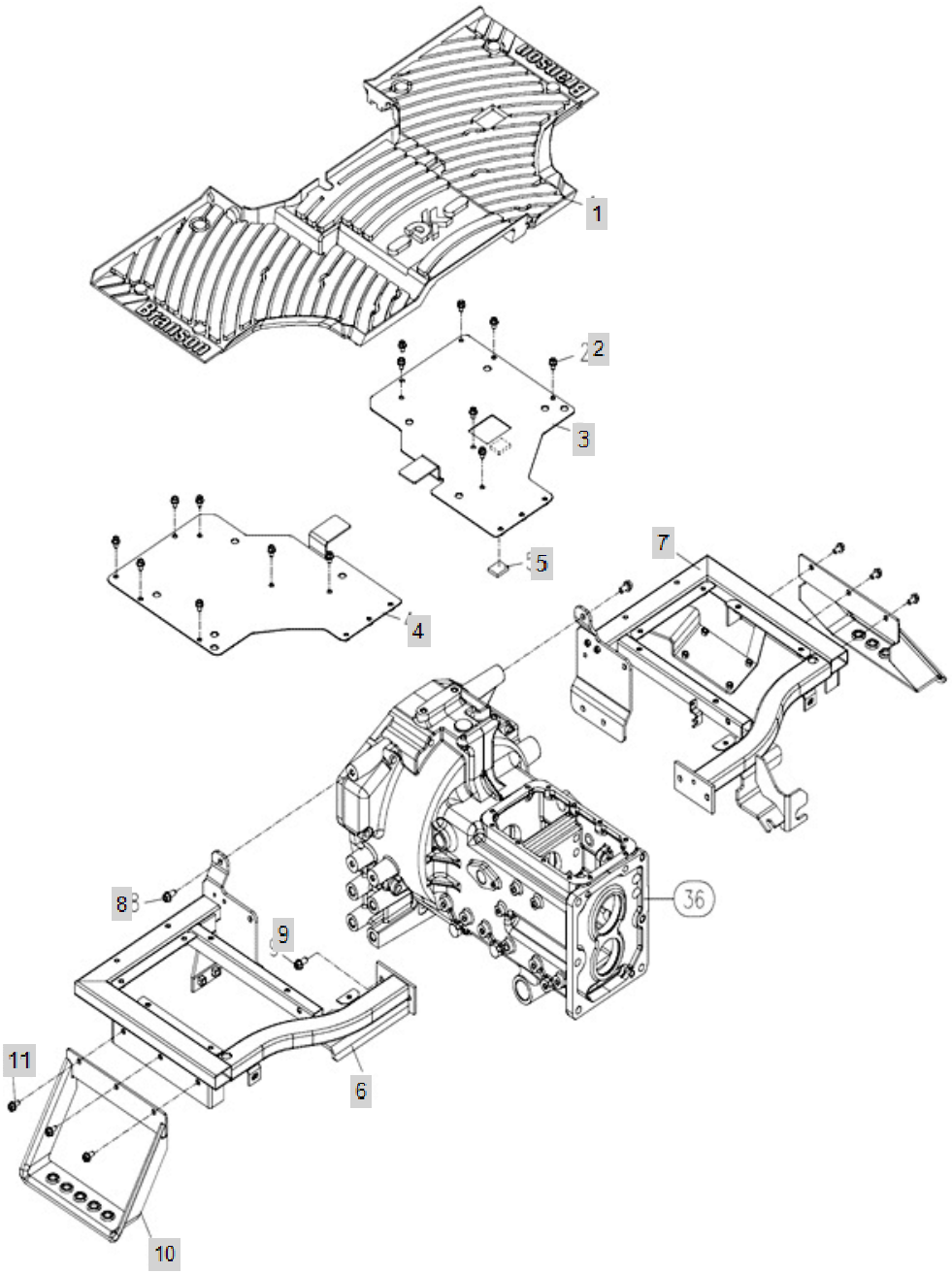

FIG C139 4520R(2014~)	Foot_Rest_Assembly	Year/Month 2020/02

KeyNo.	Part Number	Part Name	Quantity	Other
1	TA00017814B	MAT FOOT REST	1	
2	26106-080122	Bolt, Hexa (8-12)	14	
3	TA00017135C	FOOT REST(R)	1	
4	TA00017133A	FOOT REST(L)	1	
5	TA00018661A	PIPE	1	
6	TA00036054A	GUIDE(L),EXCELLENT FOOT REST	1	
7	TA00034260A	GUIDE(R),FOOT REST	1	
8	26106-100202	HEX BOLT, (10-20)	8	
9	26106-100202	HEX BOLT, (10-20)	2	
10	TA00041024A	AIDFOODHOLD ASSY	2	
10-1	TCF4130000A	FOOT STEP	2	
11	26106-080162	SCREW,HEXFLANGEHEADCAP	6	

FIG C140-1 4520R(2014~)	Seat	Year/Month 2020/02

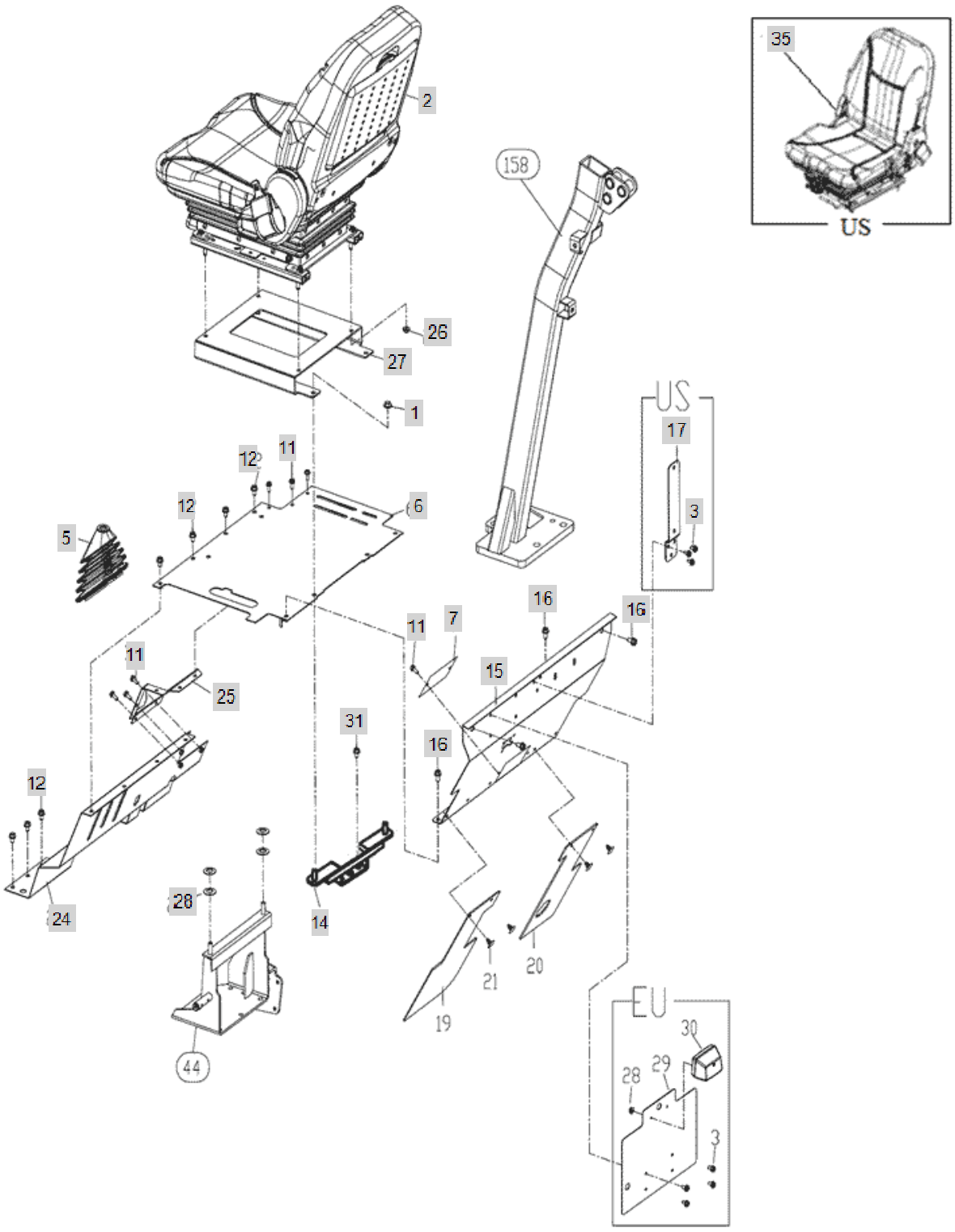

FIG C140-1 4520R(2014~)	Seat	Year/Month 2020/02

KeyNo.	Part Number	Part Name	Quantity	Other
1	26367-100002	NUT,HEXAGONFLANGE	4	
2	TA00028164A	20R SERIES SEAT	1	
3	26106-060122	HEX BOLT (6-12)	3	
5	NTE0140000A2	BOOTS,MAINSHIFT	1	
6	TA00034087B	COVER,SEAT FRAME	1	
7	TA00034755A	COVER	1	
11	26106-060162	HEXFLANGEBOLT	8	
12	26106-080122	Bolt, Hexa (8-12)	12	
14	TA00034064A	BRACKET ASS'Y	1	
15	TA00034752A	COVER ASS'Y,REAR	1	
16	26106-080162	SCREW,HEXFLANGEHEADCAP	4	
17	TZE1040003B	BRAKET ASSY	1	
23	TTE0310000A4	PIPE,AIRBREETHER	1	
24	TA00034126A	DUST COVER	1	
25	TA00002820B	LEVER GUIDE,MAIN SHIFT	1	
26	26367-080002	HEX FLANGE NUT (Φ8)	4	
27	TA00027681A	SEAT_BRAKET(EU)	1	
28	26716-050002	Nut, Hexa (Φ5)	2	
29	TA00018438B	BRAKET NAMEPLATE LAMP	1	
30	FBK182000EA3	NUMBER PLATE LAMP	1	
15-1	TA00037253A	COVER ASS'Y, REAR	1	
31	26106-100162	SCREW,HEXFLANGEHEADCAP	2	
35	BRANXH2T6-1020	BRANSON UPGRADE SEAT (10/20/20R/20C)	1	

FIG C140-2 4520R(2014~)	Seat	Year/Month 2020/02

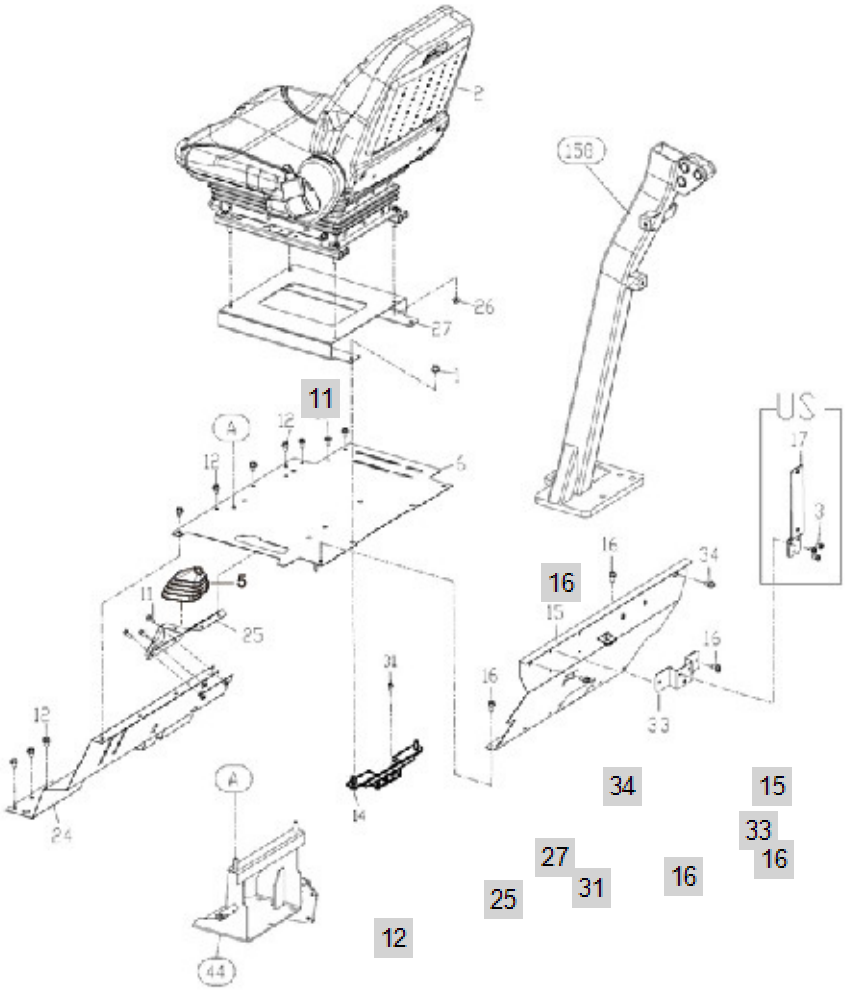

FIG C140-2 4520R(2014~)	Seat	Year/Month 2020/02

KeyNo.	Part Number	Part Name	Quantity	Other
1	26367-100002	NUT,HEXAGONFLANGE	4	
3	26106-060122	HEX BOLT (6-12)	3	
5	NTE0140000A2	BOOTS,MAINSHIFT	1	
6	TA00034087F	COVER,SEAT FRAME	1	
7	TA00034755A	COVER	1	
11	26106-060162	HEXFLANGEBOLT	8	
12	26106-080122	Bolt, Hexa (8-12)	10	
14	TA00034064C	BRACKET ASS'Y	1	
15	TA00034752C	COVER ASS'Y,REAR	1	
16	26106-080162	SCREW,HEXFLANGEHEADCAP	2	
17	TA00042423A	SMV BRACKET ASS'Y	1	
23	TTE0310000A4	PIPE,AIRBREETHER	1	
24	TA00034126B	COVER ASS'Y,DUST	1	
25	TA00002820B	LEVER GUIDE,MAIN SHIFT	1	
28	26716-050002	Nut, Hexa (Φ5)	2	
31	26106-100162	SCREW,HEXFLANGEHEADCAP	2	
33	TA00037445A	ASS'Y : SMV SUB BRACKET	4	
34	26106-080352	SCREW,HEXFLANGEHEADCAP	2	

FIG C141-1 4520R(2014~)	FuelTank	Year/Month 2020/02

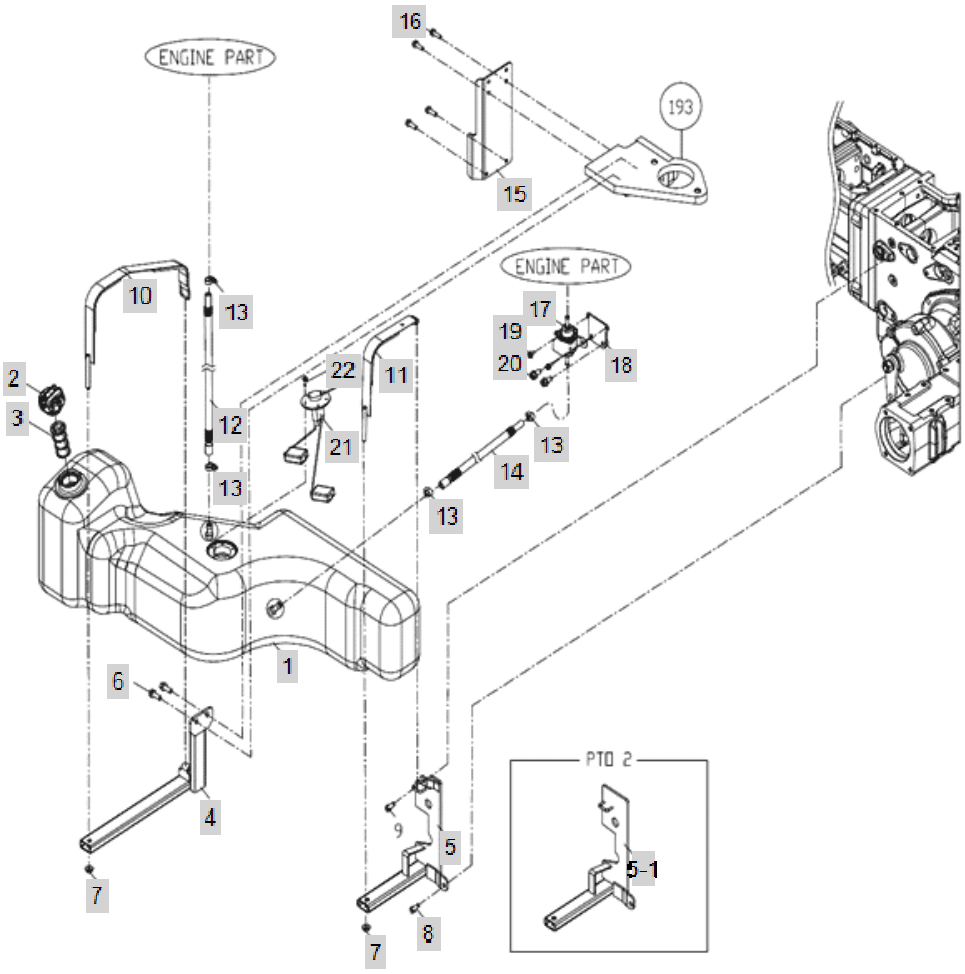

FIG C141-1 4520R(2014~)	FuelTank	Year/Month 2020/02

KeyNo.	Part Number	Part Name	Quantity	Other
1	TA00035291C	FUEL TANK ASSY	1	
2	TA00017995A	CAP, FUEL FILLER	1	
3	TA00027741A	FILTER STRAINER	1	
4	TA00035817A	TANK SUPPORT ASSY	1	
5	TA00036449A	FUEL TANK REAR SUPPROT	1	
5-1	TA00035819A	FUEL TANK REAR SUPPROT	1	
6	26106-100252	SCREW,HEXFLANGEHEADCAP	2	
7	26367-100002	NUT,HEXAGONFLANGE	2	
8	26106-080252	SCREW,HEXFLANGEHEADCAP	2	
10	TA00035957A	FRONT BAND ASSY	1	
11	TA00035974A	BAND REAR ASSY	1	
12	TA00036175C	FUEL LINE(1100)	1	
13	23000-016000	Clip, Hose (Φ16)	4	
14	TA00036178C	FUEL LINE(1000)	1	
15	TA00035811A	COVER	1	
16	26106-080162	SCREW,HEXFLANGEHEADCAP	4	
17	HF20190000A2	FUEL FEED PUMP	1	
18	TC51420000B4	STAY ASSY	1	
19	26106-060122	HEX BOLT (6-12)	2	
20	26106-100202	HEX BOLT, (10-20)	2	
21	HA00000855A	FUEL SENSOR	1	
22	26106-050142	HEX FLANGE BOLT (5-14)	5	

FIG C141D-2 4520R(2014~)	FUEL TANK	Year/Month 2020/02

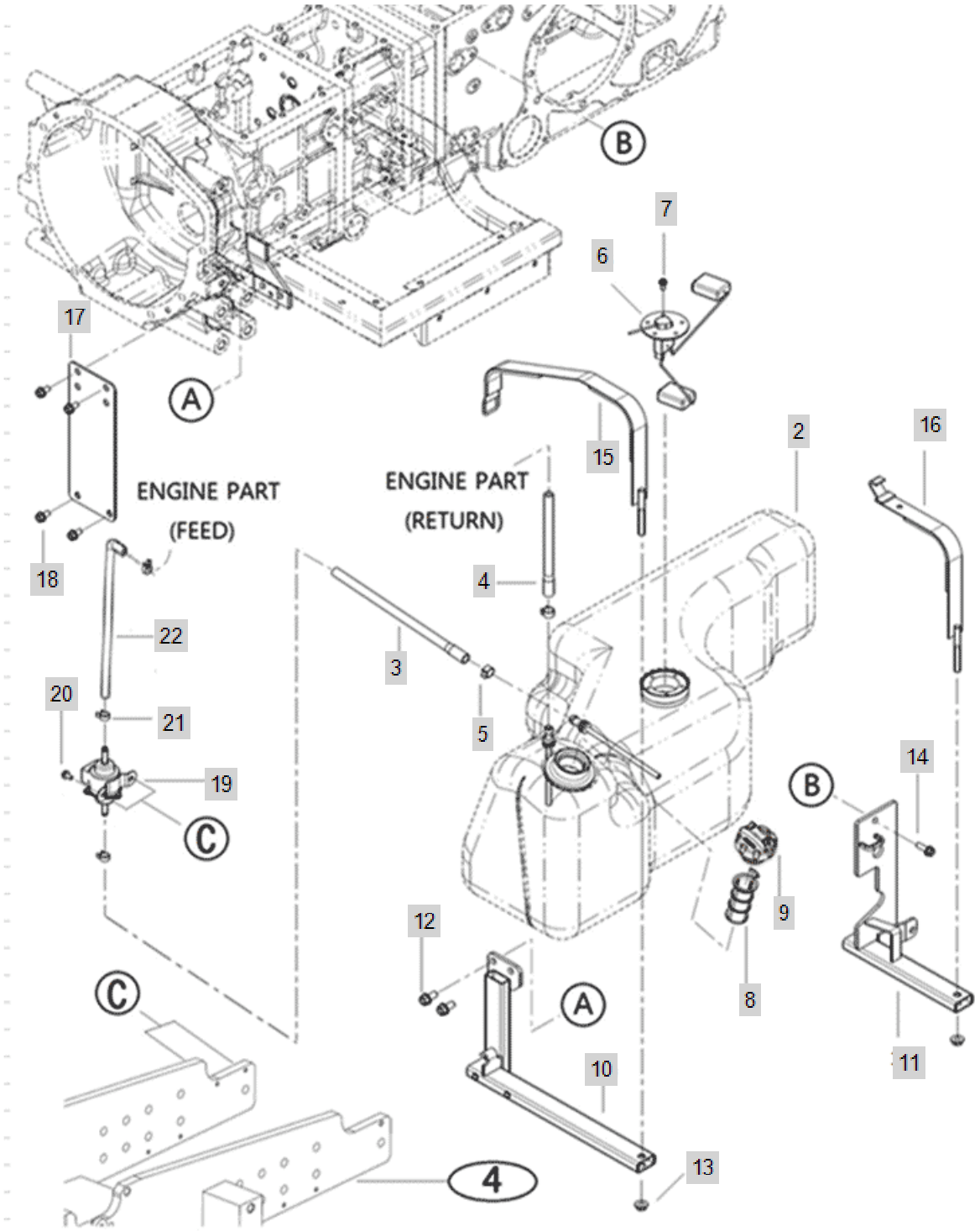

FIG C141D-2 4520R(2014~)	FUEL TANK	Year/Month 2020/02

KeyNo.	Part Number	Part Name	Quantity	Other
1	TA00037917B	FUEL TANK ASS'Y	1	
2	TA00035291D	FUEL TANK ASSY	1	
3	TA00036178C	FUEL LINE(1000)	1	
4	TA00036175C	FUEL LINE(1100)	1	
5	23080-015000	Clamp, Hose (Φ15)	2	
6	HA00000855A	FUEL SENSOR	1	
7	26106-050142	HEX FLANGE BOLT (5-14)	5	
8	TA00056576A	FUEL TANK STRAINER	1	
8-1	TA00027741A	FILTER STRAINER	1	
9	TA00037880A	FUEL CAP	1	
10	TA00035817E	TANK SUPPORT, FRONT	1	
11	TA00036449C	FUEL TANK REAR SUPPROT	1	
12	26106-100202	HEX BOLT, (10-20)	6	
13	26367-100002	NUT,HEXAGONFLANGE	2	
14	26106-080252	SCREW,HEXFLANGEHEADCAP	1	
15	TA00035957E	FRONT BAND ASSY	1	
16	TA00035974F	BAND REAR ASSY	1	
17	TA00035811C	COVER	1	
18	26106-080162	SCREW,HEXFLANGEHEADCAP	4	
19	HA00001612A	FEED PUMP	1	
19-2	HF20190000A2	FUEL FEED PUMP	1	delete
20	26106-060122	HEX BOLT (6-12)	2	
21	23080-013000	Clamp, Hose (Φ13)	2	
22	TA00055012A	HOSE, FUEL	1	

FIG C144 4520R(2014~)	Name_Plate_20R	Year/Month 2020/02

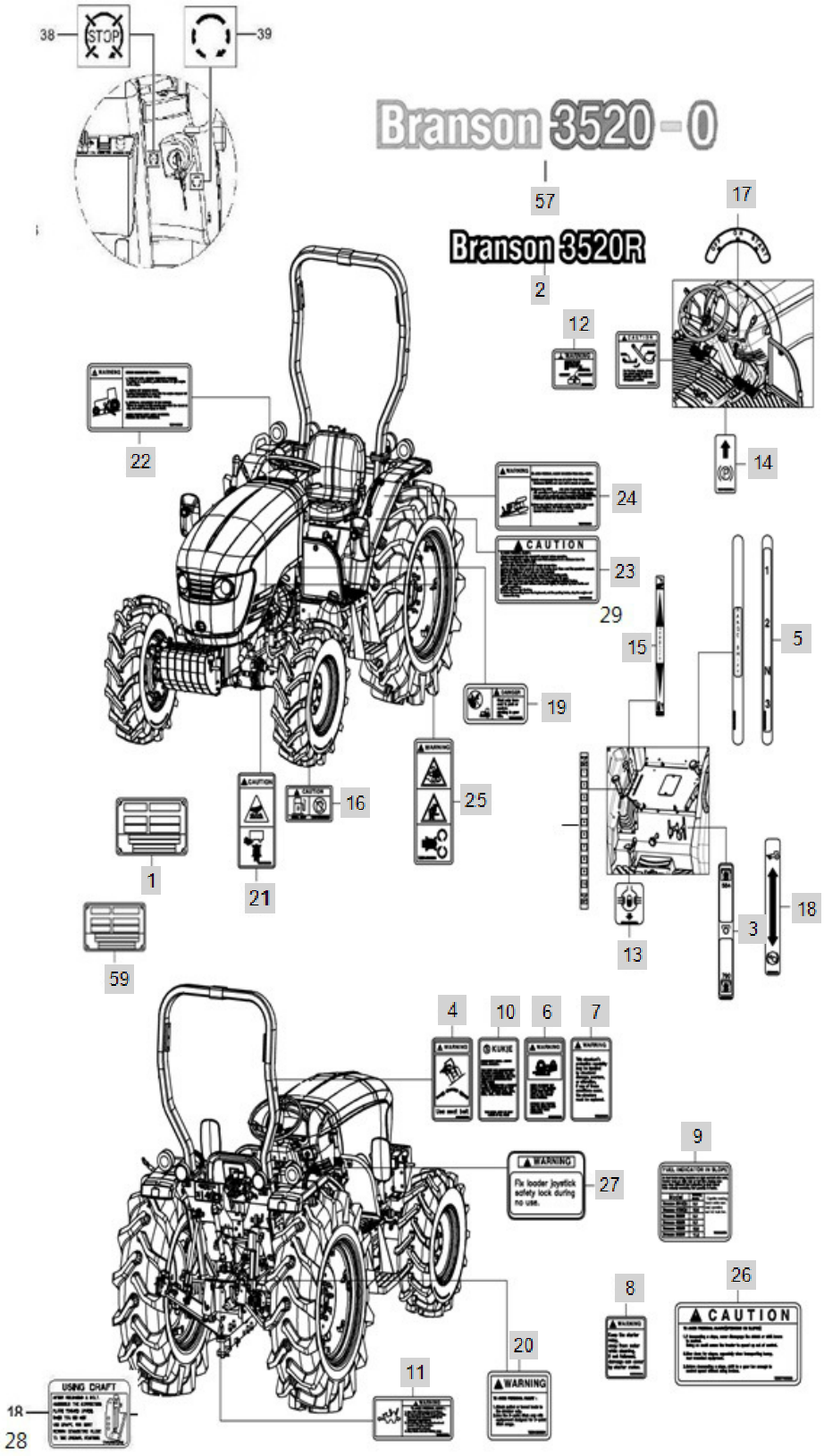

FIG C144 4520R(2014~)	Name_Plate_20R	Year/Month 2020/02

KeyNo.	Part Number	Part Name	Quantity	Other
1	TA00026868A	NAME PLATE	1	
1-1	TA00026043A	NAME PLATE	1	
1-2	TA00026044A	NAME PLATE	1	
1-3	TA00026045A	NAME PLATE -> TA00026045B	1	
1-4	TA00026046B	NAME PLATE	1	
2	TA00026867A	NAME PLATE	2	
2-1	TA00026039A	NAME PLATE	2	
2-2	TA00026040A	NAME PLATE	2	
2-3	TA00026041A	HOOD DECAL (4520R)	2	
2-4	TA00026042B	HOOD DECAL(5220R)	2	
3	NTE4260000B	NAME PLATE, PTO SHIFT	1	
4	NTE5150000C	NAME PLATE, SEAT	1	
5	NTE5200000B	NAME PLATE, SUB SHIFT	1	
6	NTE5210000C	NAME PLATE, PTO	1	
7	NTE5220000C	NAME PLATE, DANGER	1	
8	NTE5270000A4	NAME PLATE, WARNING(STARTER RELAY)	1	
9	TA00032309A	NAME PLATE CAUTION(FUEL)	1	
10	TA00030942A	ROPS NAME PLATE	1	
11	TA00015596A	PTO WARNING PLATE	1	
12	TA00015723A	LABEL, BRAKE PEDAL	1	
13	TZE4130000B4	LABEL,DIFFERENTIAL	1	
14	TZE4150000A4	LABEL, PAKING BRAKE	1	
15	TZE4170000B4	LABEL,HYDLIFT	1	
16	TZE4190000C	NAME PLATE, REFUEL	1	
17	TZE4330000B	NAME PLATE, KEY SWICH	1	
18	TZE5050000B	NAME PLATE, FRONT WHEEL	1	
19	TZE5110000B4	NAMEPLATE,STARTERWARNING	1	
20	TZE5120000B	NAME PLATE,CAUTION-CONNECTION	1	
21	TZE5130000C	NAME PLATE, CAUTION	1	
22	TZE5140000B	NAME PLATE,CAUTION-GETTING OFF	1	
23	TZE5160000B	NAME PLATE,CAUTION-SAFETY	1	
24	TZE5170000B	NAME PLATE,ROPS	1	
25	TZE5180000C	NAME PLATE,CAUTION-ROTATION	1	
26	TZE5770000B	NAME PLATE, CAUTION	1	
27	TA00026342A	NAMEPLATE	1	
52	EA00002940A	DATAPLATE	1	
53	EA00002941A	DATAPLATE	1	
54	EA00002942A	DATAPLATE	1	
55	EA00002943A	DATAPLATE	1	
56	EA00002944A	DATAPLATE	1	
57	TA00034936A	4120R-O(EU) BONNET NAMA PLATE	2	
57-1	TA00034937A	5020R-O(EU) BONNET NAMA PLATE	2	
57-2	TA00034938A	5820R-O(EU) BONNET NAMA PLATE	2	
57-3	TA00034939A	20R-O(EU) NAMA PLATE	2	
59	TA00034948A	3520R-O(RU) NAME PLATE	1	

FIG C144 4520R(2014~)	Name_Plate_20R	Year/Month 2020/02

KeyNo.	Part Number	Part Name	Quantity	Other
59-1	TA00034949A	4020R-O(RU) NAME PLATE	1	
59-2	TA00034950A	4520R-O(RU) NAME PLATE	1	
59-3	TA00034951A	5220R-O(RU) NAME PLATE	1	

FIG C144C 4520R(2014~)	Nameplate	Year/Month 2020/02

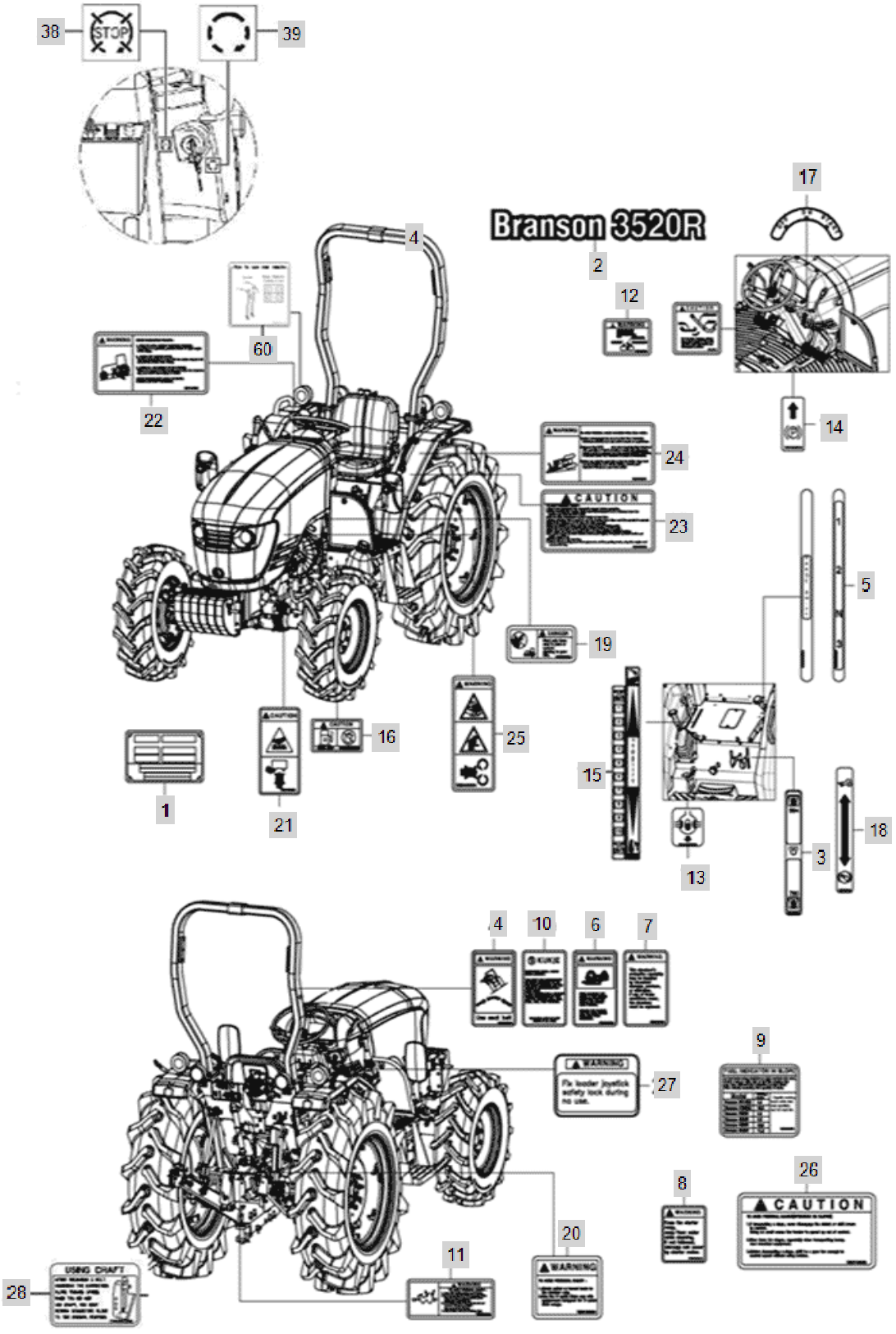

FIG C144C 4520R(2014~)	Nameplate	Year/Month 2020/02

KeyNo.	Part Number	Part Name	Quantity	Other
1	TA00026044A	NAME PLATE	0	
2	TA00026040A	NAME PLATE	0	
3	NTE4260000B	NAME PLATE, PTO SHIFT	0	
4	NTE5150000C	NAME PLATE, SEAT	0	
5	NTE5200000B	NAME PLATE, SUB SHIFT	0	
6	NTE5210000C	NAME PLATE, PTO	0	
7	NTE5220000C	NAME PLATE, DANGER	0	
8	NTE5270000A4	NAME PLATE, WARNING(STARTER RELAY)	0	
9	TA00032309A	NAME PLATE CAUTION(FUEL)	0	
10	NTE5830000B	NAME PLATE, ROPS MODEL	0	
11	TA00029539B	20R_ROPS NAME PLATE	0	
12	TA00015723A	LABEL, BRAKE PEDAL	0	
13	TZE4130000B4	LABEL,DIFFERENTIAL	0	
14	TZE4150000A4	LABEL, PAKING BRAKE	0	
15	TA00036922A	LIFT STICKER	0	
16	TZE4190000C	NAME PLATE, REFUEL	0	
17	TZE4330000B	NAME PLATE, KEY SWICH	0	
18	TZE5050000B	NAME PLATE, FRONT WHEEL	0	
19	TZE5110000B4	NAMEPLATE,STARTERWARNING	0	
20	TZE5120000B	NAME PLATE,CAUTION-CONNECTION	0	
21	TZE5130000C	NAME PLATE, CAUTION	0	
22	TZE5140000B	NAME PLATE,CAUTION-GETTING OFF	0	
23	TZE5160000B	NAME PLATE,CAUTION-SAFETY	0	
24	TZE5170000B	NAME PLATE,ROPS	0	
25	TZE5180000C	NAME PLATE,CAUTION-ROTATION	0	
26	TZE5770000B	NAME PLATE, CAUTION	0	
27	TA00026342A	NAMEPLATE	0	
28	TA00015725A	DRAFT CONTROL LABEL	0	
38	NTE501E000A4		0	
39	NTE504E000A4	NAME PLATE, STARTING	0	
53	EA00002941A	DATAPLATE	0	
60	TA00037417A	NAME PLATE(SCV)	0	

FIG C146-1 4520R(2014~)	Top_Link_Lift_Link	Year/Month 2020/02

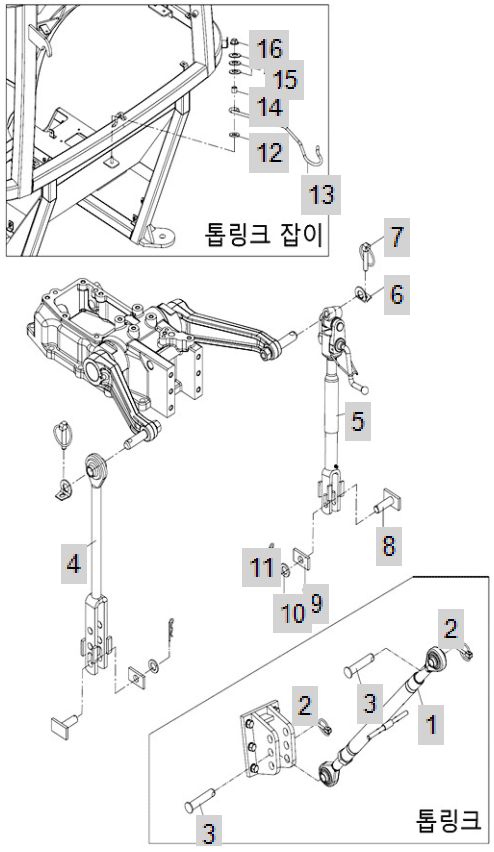

FIG C146-1 4520R(2014~)	Top_Link_Lift_Link	Year/Month 2020/02

KeyNo.	Part Number	Part Name	Quantity	Other
1	TA00034892A	TOP LINK ASSY	1	
2	NT300000INA4	RING PIN ASSY'	2	
3	TTE6130000A4	PIN	2	
4	NTE80400INA3	LIFT LINK ASSY (LH)	1	
5	NTE70200INA3	ADJUSTABLE LIFT LINK ASSY (RH)	1	
6	TCG2080000A4	COLLAR, SOCKET	2	
7	TB44030000B4	RING PIN ASSY	2	
8	TTE73000INA4	LIFT YORK PIN	2	
9	TTE7310000A4	STOPPER	2	
10	22127-160000	WASHER, SPLAIN (Φ 16)	2	
11	22360-160000	PIN , SNAP (6Φ)	2	
12	22137-080000	WASHER, PLAIN (Φ 08)	1	
13	TCG1130000A	HOOK (TOP LINK)	1	
14	TCG1160000A4	COLLAR	1	
15	TC94060000A	SUB TO-> TC94060000A4	3	
16	26347-080002	Unut	1	

FIG C146-2 4520R(2014~)	Top_Link_Lift_Link(2014.08.28)	Year/Month 2020/02

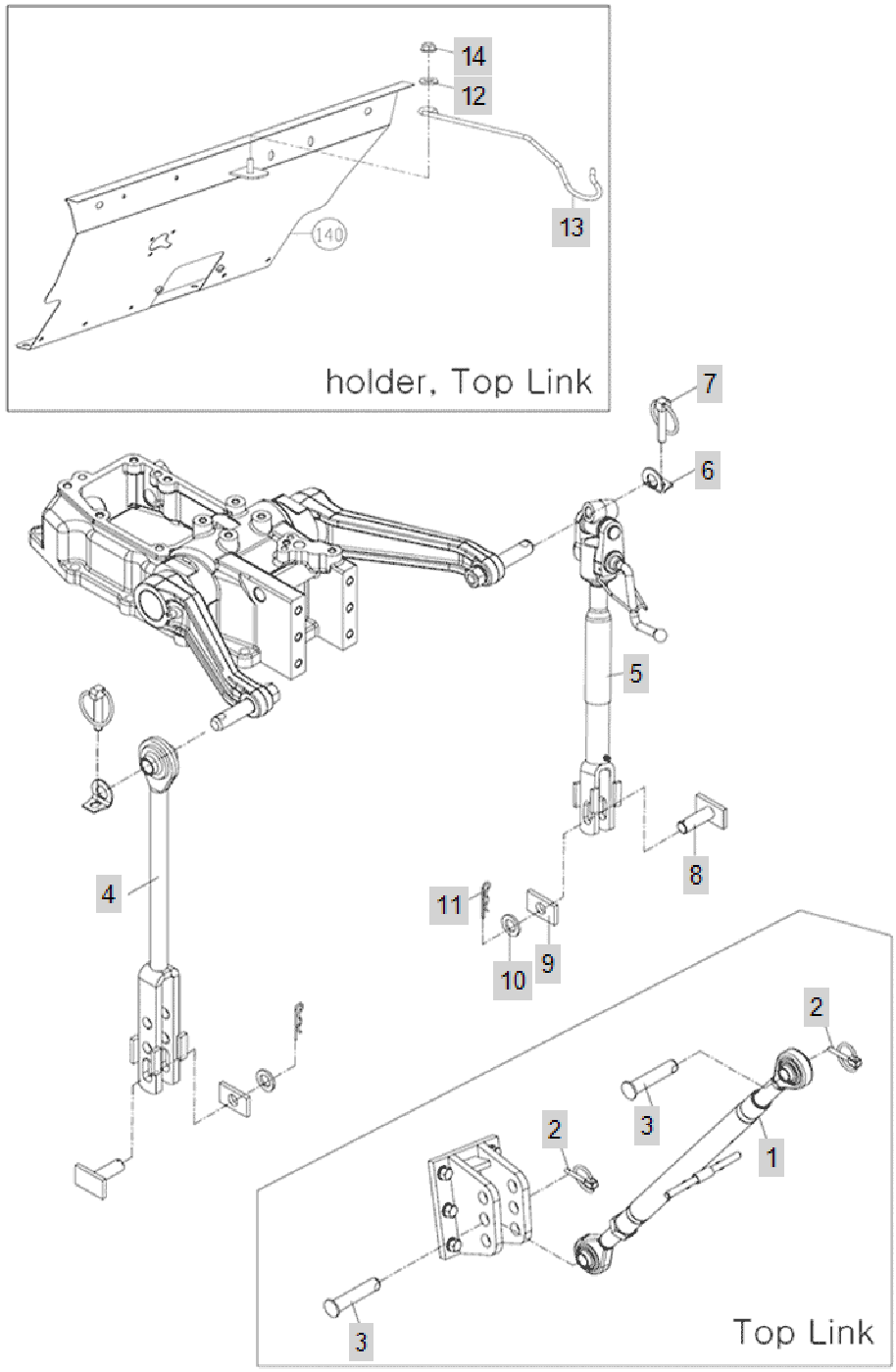

FIG C146-2 4520R(2014~)	Top_Link_Lift_Link(2014.08.28)	Year/Month 2020/02

KeyNo.	Part Number	Part Name	Quantity	Other
1	TA00034892A	TOP LINK ASSY	1	
2	NT300000INA4	RING PIN ASSY'	2	
3	TTE6130000A4	PIN	2	
4	NTE80400INA3	LIFT LINK ASSY (LH)	1	
5	NTE70200INA3	ADJUSTABLE LIFT LINK ASSY (RH)	1	
6	TCG2080000A4	COLLAR, SOCKET	2	
7	TB44030000B4	RING PIN ASSY	2	
8	TTE73000INA4	LIFT YORK PIN	2	
9	TTE7310000A4	STOPPER	2	
10	22127-160000	WASHER, SPLAIN (Φ 16)	2	
11	22360-160000	PIN , SNAP (6Φ)	2	
12	22157-080000	WASHER, PLAIN (Φ 08)	1	
13	TCG1130000A	HOOK (TOP LINK)	1	
14	26347-080002	Unut	1	

FIG C146-3 4520R(2014~)	TOP LINK, LIFT LINK(2014.12)	Year/Month 2020/02

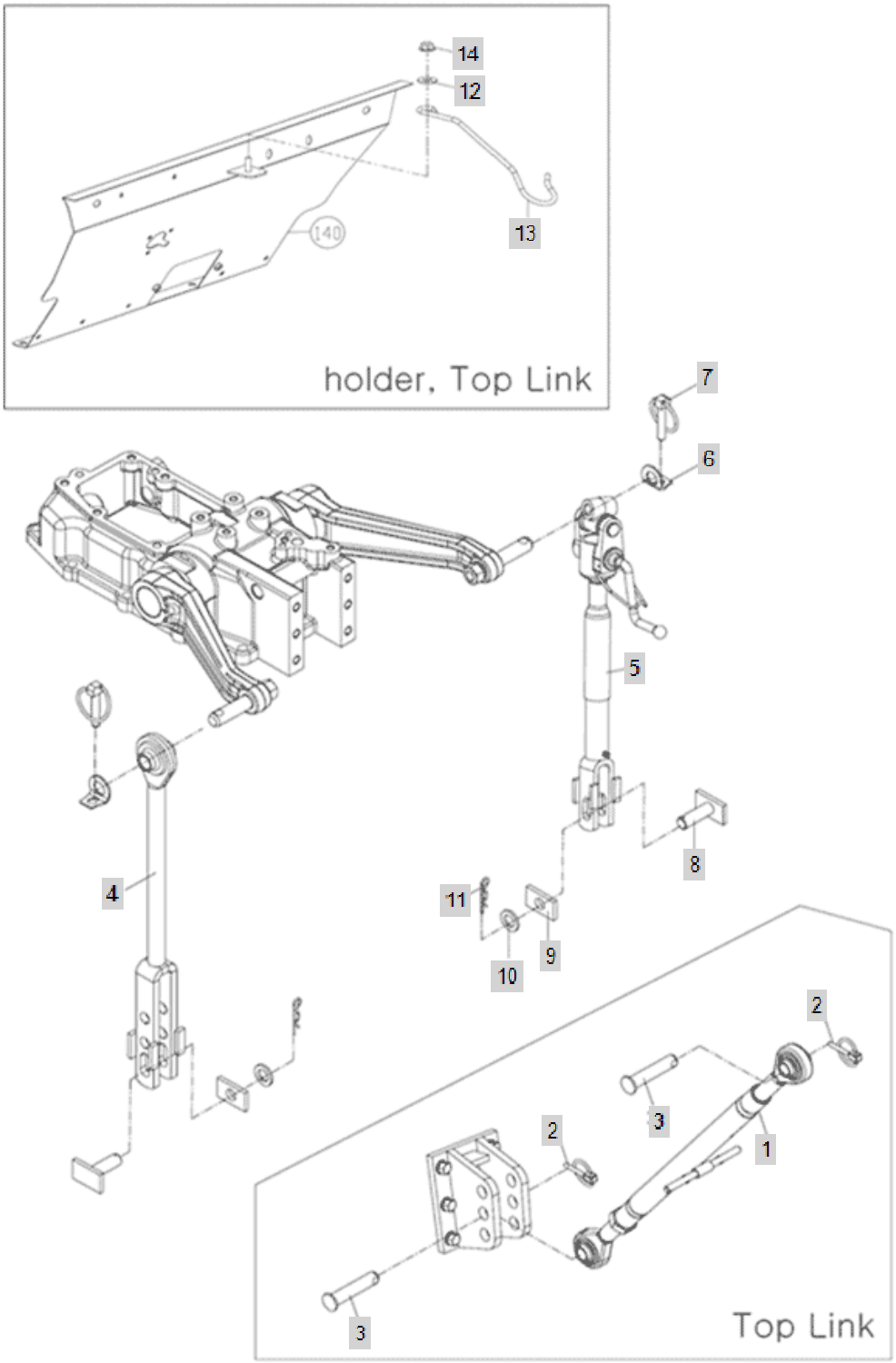

FIG C146-3 4520R(2014~)	TOP LINK, LIFT LINK(2014.12)	Year/Month 2020/02

KeyNo.	Part Number	Part Name	Quantity	Other
1	TA00034892A	TOP LINK ASSY	1	
2	NT300000INA4	RING PIN ASSY'	2	
3	TTE6130000A4	PIN	2	
4	NTE80400INA3	LIFT LINK ASSY (LH)	1	
5	NTE70200INA3	ADJUSTABLE LIFT LINK ASSY (RH)	1	
6	TCG2080000A	COLLAR	2	
7	TB44030000B	RING PIN ASS'Y	2	
8	TTE73000INA4	LIFT YORK PIN	2	
9	TTE7310000A4	STOPPER	2	
10	22127-160000	WASHER, SPLAIN (Φ 16)	2	
11	22360-160000	PIN , SNAP (6Φ)	2	
12	22157-080000	WASHER, PLAIN (Φ 08)	2	
13	TCG1130000B	HOOK (TOP LINK)	1	
14	26347-080002	Unut	1	

FIG C146-4 4520R(2014~)	Top Link Lift Link(2018.12~)	Year/Month 2020/02

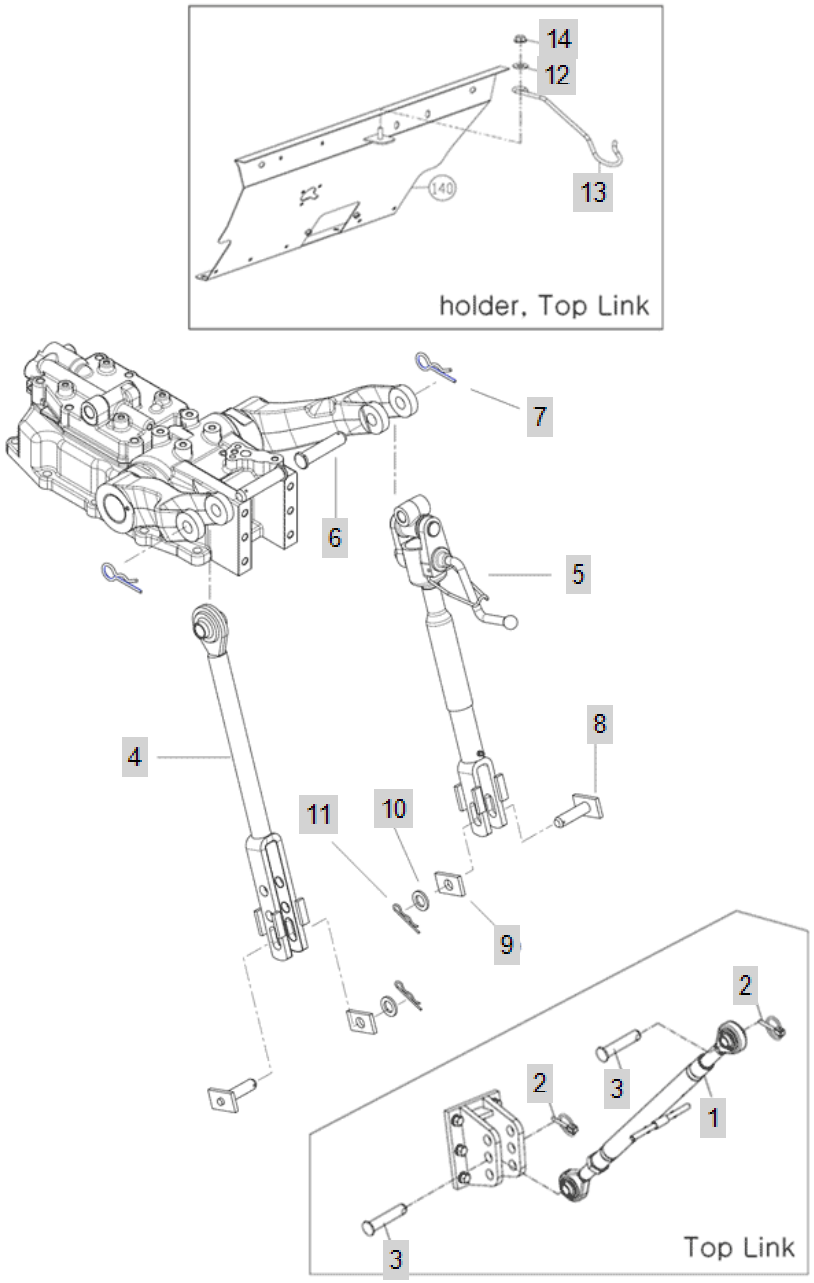

FIG C146-4 4520R(2014~)	Top Link Lift Link(2018.12~)	Year/Month 2020/02

KeyNo.	Part Number	Part Name	Quantity	Other
1	TA00034892A	TOP LINK ASSY	1	
2	NT300000INA4	RING PIN ASSY'	2	
3	TTE6130000A4	PIN	2	
4	NTE80400INB3	LIFT LINK ASS'Y(L)	1	
5	TA00040654A	LIFT LINK ASS'Y(R)	1	
6	TTE7290000B4	PIN	2	
7	TA00059528A	SNAP PIN	2	
7-1	TA00059528A	SNAP PIN	2	
8	TTE73000INA4	LIFT YORK PIN	2	
9	TTE7310000A4	STOPPER	2	
10	22127-160000	WASHER, SPLAIN (Φ 16)	2	
11	TA00059528A	SNAP PIN	2	
11-1	TA00059528A	SNAP PIN	2	
12	22157-080000	WASHER, PLAIN (Φ 08)	2	
13	TA00047007B	HOOK(TOPLINK)	2	
13-1	TA00047007B	HOOK(TOPLINK)	1	
14	26347-080002	Unut	1	

FIG C150A-1 4520R(2014~)	Lower_Link	Year/Month 2020/02

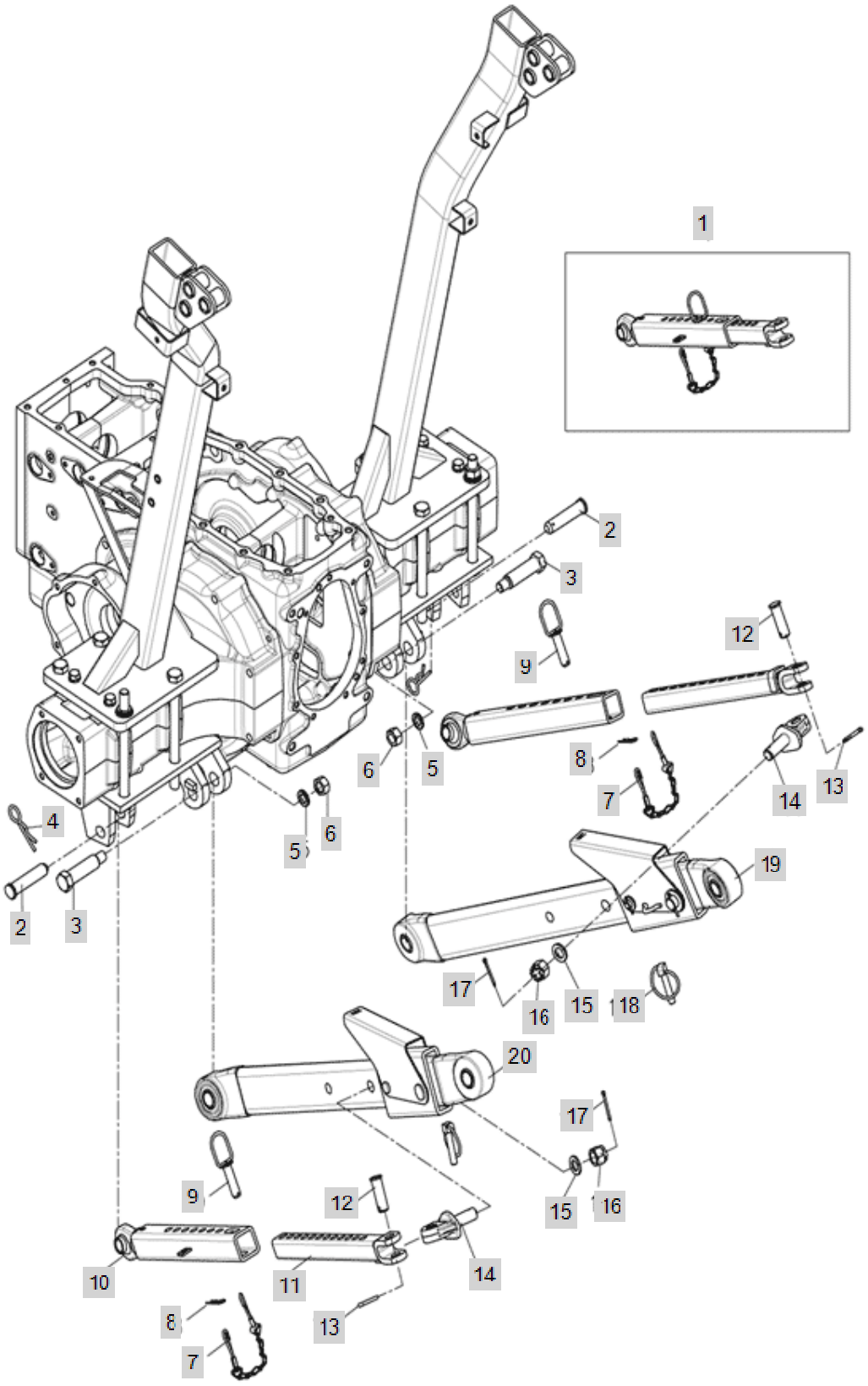

FIG C150A-1 4520R(2014~)	Lower_Link	Year/Month 2020/02

KeyNo.	Part Number	Part Name	Quantity	Other
1	FBF0020000A2	CHECK BAR	2	
2	FTF0100000A4	FIXING PIN, CHECK CHAIN	2	
3	TB44360000A4	BOLT	2	
4	NTE70100INA4	SNAP PIN	2	
5	22217-160000	WASHER, SPRING (Φ 16)	2	
6	26736-160002	HEXNUT	2	
7	FBF0060000A4	CONNECT LINK	2	
8	22360-140000	PIN , SNAP (4Φ)	2	
9	FBF0050000A4	CONNECT PIN -> FBF0020000A2	2	
10	FBF0030000A3	CHECK BAR FRONT	2	
11	FBF0040000A3	CHECK BAR R	2	
12	FTF0090000A4	PIN, CHECK CHAIN	2	
13	22417-500320	PIN , COTTER (5-32)	2	
14	TA00016119A	EYE BOLT, LOWER LINK	2	
15	22137-180000	WASHER, PLAIN (Φ 18)	2	
16	26837-180002	CASTLE NUT-FINE THREAD	2	
17	22417-400360	PIN , COTTER (4-36)	2	
18	TB440300INA4	RING PIN ASSY'	2	
19	TA00002000A	LOWER LINK ASSY (RH) -> TA00002000B	1	
20	TA00001999A	LOWER LINK ASSY (LH) -> TA00001999B	1	

FIG C150D-1 4520R(2014~)	LOWER LINK	Year/Month 2020/02

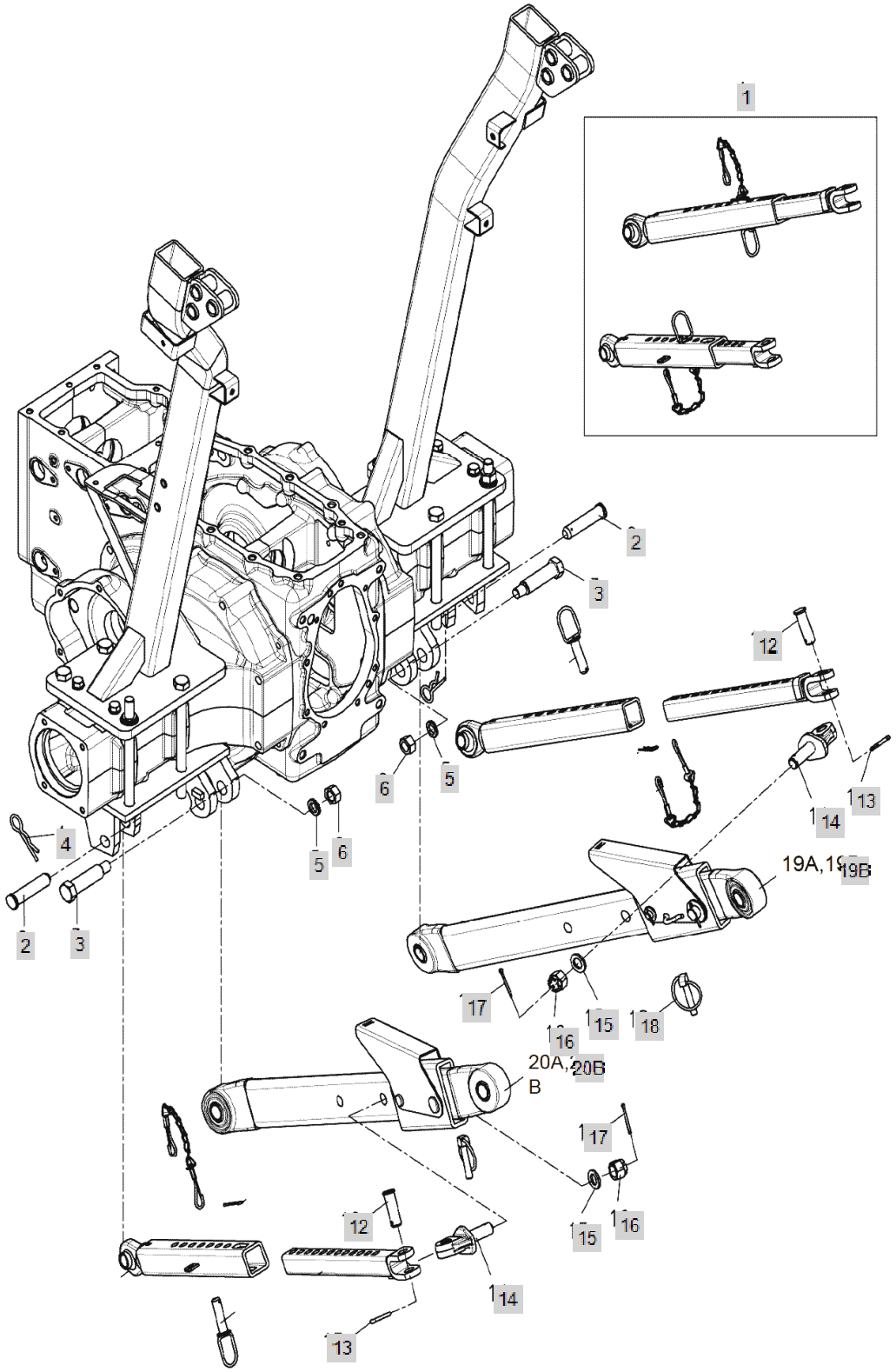

FIG C150D-1 4520R(2014~)	LOWER LINK	Year/Month 2020/02

KeyNo.	Part Number	Part Name	Quantity	Other
1	FBF0020000A2	CHECK BAR	2	
2	FTF0100000A4	FIXING PIN, CHECK CHAIN	2	
3	TB44360000A4	BOLT	2	
4	TTE7010000A4	SNAPPIN	2	
5	22217-160000	WASHER, SPRING (Φ 16)	2	
6	26736-160002	HEXNUT	2	
7	FBF0060000A4	CONNECT LINK	2	
8	22360-140000	PIN , SNAP (4Φ)	2	
9	FBF0050000A4	CONNECT PIN -> FBF0020000A2	2	
10	FBF0030000A3	CHECK BAR FRONT	2	
11	FBF0040000A3	CHECK BAR R	2	
12	FTF0090000A4	PIN, CHECK CHAIN	2	
13	22417-500320	PIN , COTTER (5-32)	2	
14	TA00016119A	EYE BOLT, LOWER LINK	2	
15	22137-180000	WASHER, PLAIN (Φ 18)	2	
16	26837-180002	CASTLE NUT-FINE THREAD	2	
17	22417-400360	PIN , COTTER (4-36)	2	
18	TB440300INA4	RING PIN ASSY'	2	
19B	NTF03400IND2	LOWER LINK ASSY (RH)	1	
20B	NTF03300IND2	LOWER LINK ASSY (LH)	1	

FIG C150D-2 4520R(2014~)	LOWER LINK	Year/Month 2020/02

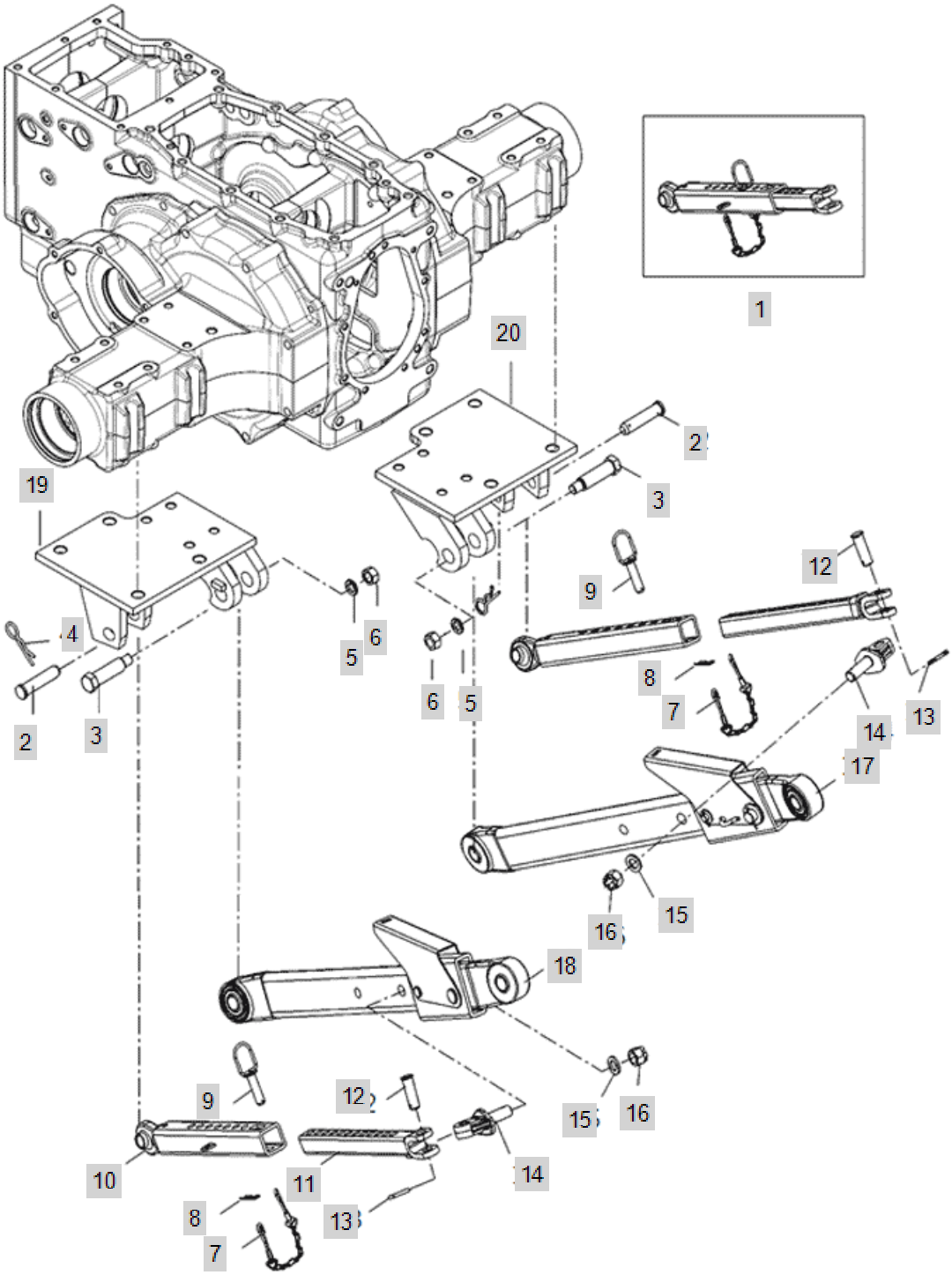

FIG C150D-2 4520R(2014~)	LOWER LINK	Year/Month 2020/02

KeyNo.	Part Number	Part Name	Quantity	Other
1	TA00041947A	CHECK-BAR	2	
2	FTF0100000A4	FIXING PIN, CHECK CHAIN	2	
3	TB44360000A4	BOLT	2	
4	NTE70100INA4	SNAP PIN	2	
5	22217-160000	WASHER, SPRING (Φ 16)	2	
6	26736-160002	HEXNUT	2	
7	FBF0060000A4	CONNECT LINK	2	
8	22360-140000	PIN , SNAP (4Φ)	2	
9	FBF0050000B4	CONNECT PIN	2	
10	TA00041948B	CHECKBAR F	2	
11	TA00041949A	CHECKBAR R	2	
12	FTF0090000A4	PIN, CHECK CHAIN	2	
13	22417-400360	PIN , COTTER (4-36)	2	
14	TA00016119B	BOLT	2	
15	22217-180000	WASHER, SPRING (Φ 18)	2	
16	26736-180002	NUT	2	
17	TA00035077A	LOWER LINK ASS'Y(R)	1	
18	TA00035076A	LOWER LINK ASS'Y(L)	1	
19	TA00048142C	BRACKET ASSY, LOWER LINK(L)	1	
20	TA00048143C	BRACKET ASSY, LOWER LINK(R)	1	

FIG C152 4520R(2014~)	DrawBar_Hitch	Year/Month 2020/02

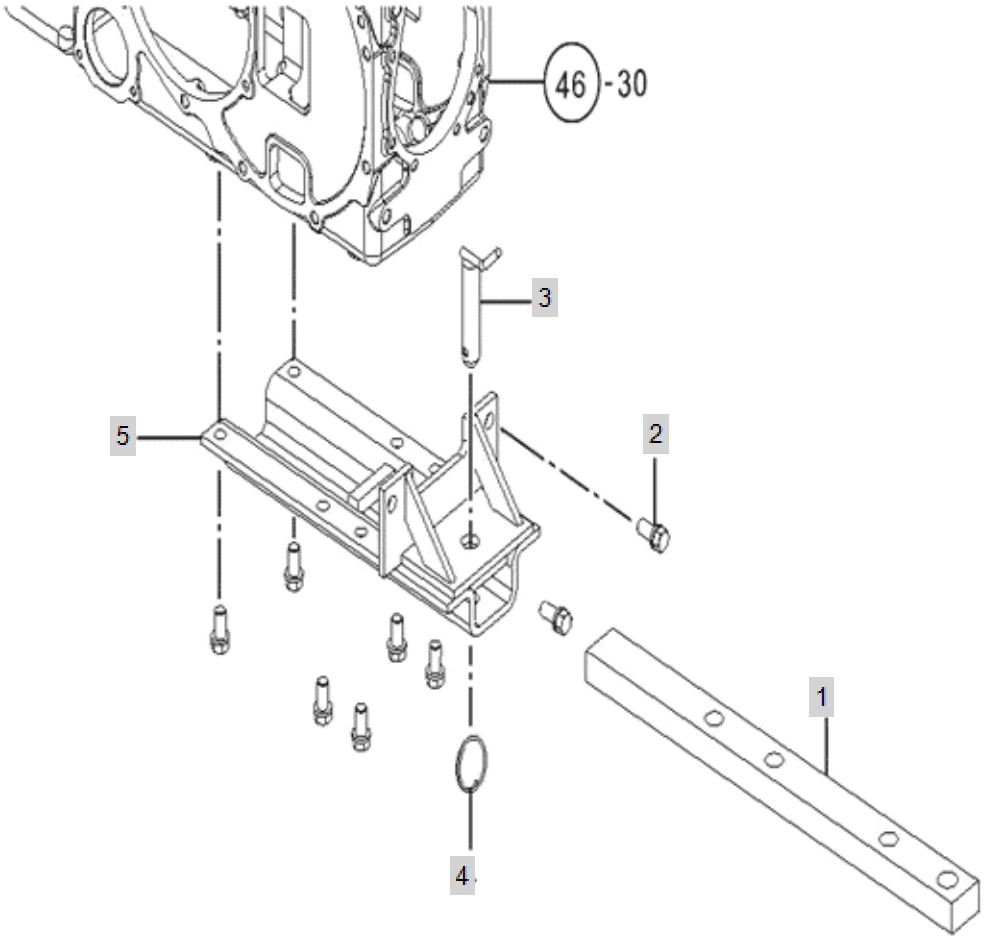

FIG C152 4520R(2014~)	DrawBar_Hitch	Year/Month 2020/02

KeyNo.	Part Number	Part Name	Quantity	Other
1	NTF20100INA4	DRAW BAR	0	
2	26013-140302	BOLT(+SW)	0	
3	TB46060000A4	HITCHPIN22	0	
4	TB46070000A4	RING	0	
5	TZF2050000A1	BRACKETDRAWBARHITCH	0	

FIG C158 4520R(2014~)	Safety_Frame_Assy	Year/Month 2020/02

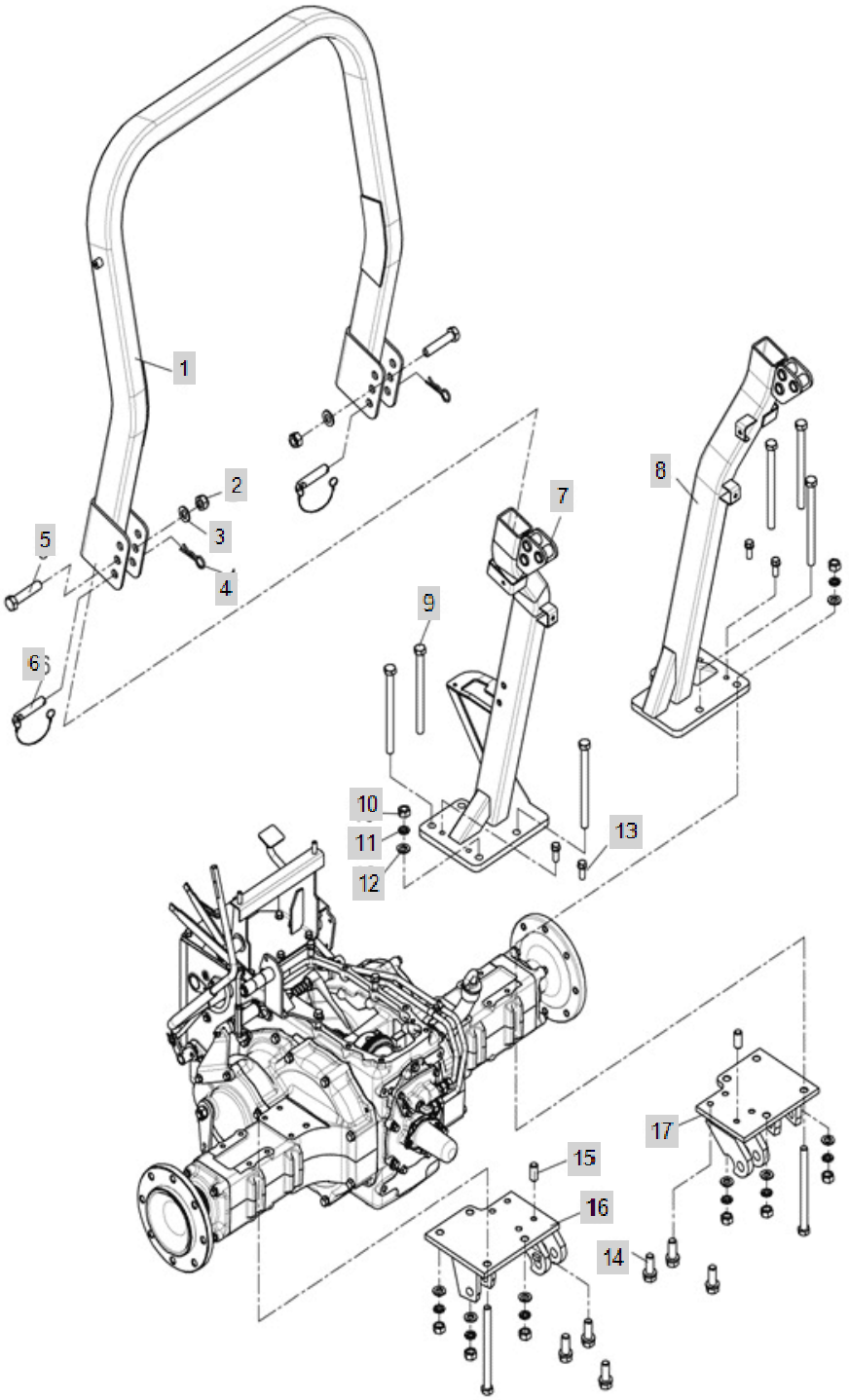

FIG C158 4520R(2014~)	Safety_Frame_Assy	Year/Month 2020/02

KeyNo.	Part Number	Part Name	Quantity	Other
1	NTF8350000C	ROPS ASS'Y	1	
2	26347-180002	NUT	2	
3	22137-180000	WASHER, PLAIN (Φ 18)	2	
4	TTE7010000A4	SNAPPIN	2	
5	26116-180902	BOLT	2	
6	NTF8400000A3	ROPSPIN	2	
7	TA00049936B	FRAME ASS'Y(L), LOWER	1	
7-1	TA00000938C	LOWER FRAME ASSY, LH	1	
8	TA00049938C	FRAME ASS'Y(R), LOWER	1	
8-1	TA00000939B	LOWER FRAME ASSY, RH	1	
9	TTF8170000A4	BOLT	8	
10	26716-160002	NUT	8	
11	22217-160000	WASHER, SPRING (Φ 16)	8	
12	22137-160000	WASHER, PLAIN (Φ 16)	8	
13	26013-120322	HEX BOLT W/WASHER	4	
14	26013-120302	HEX BOLT W/WASHER	6	
15	22312-120220	PIN, DOWEL (12-22)	2	
16	TA00000735B	LOWER LINK BRACKET, LH	1	
17	TA00000736B	LOWER LINK BRACKET, RH	1	
18	TA00060593A	REFLECTOR	2	
18-1	TTE0230000B3	SEAT SAFETY BELT	1	delete

FIG C159 4520R(2014~)	Mid_ROPS_Assy	Year/Month 2020/02

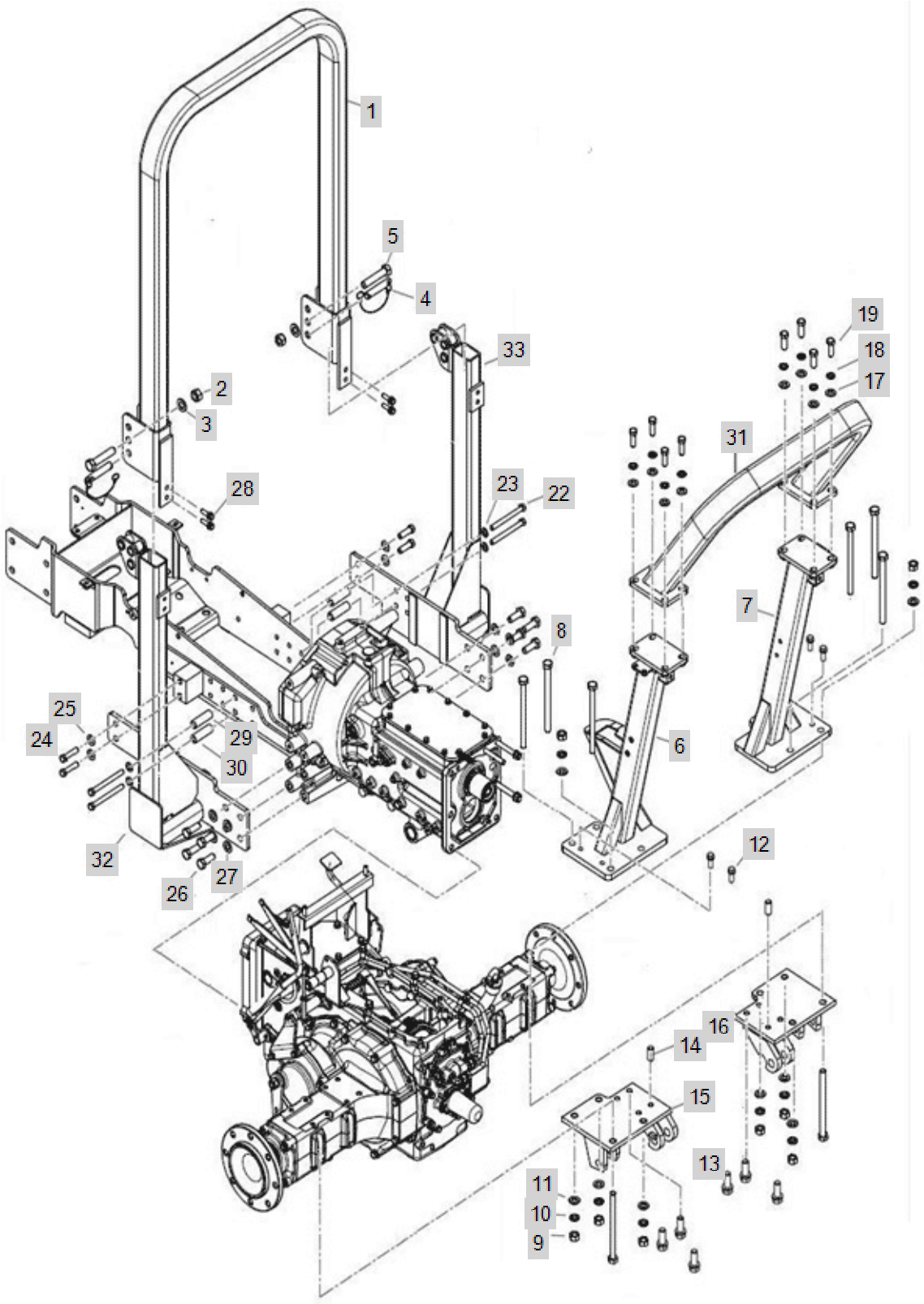

FIG C159 4520R(2014~)	Mid_ROPS_Assy	Year/Month 2020/02

KeyNo.	Part Number	Part Name	Quantity	Other
1	TA00028274A	HIGH FRAME ASSM	1	
2	26347-180002	NUT	2	
3	22137-180000	WASHER, PLAIN (Φ 18)	2	
4	TA00015688A	ROPS PIN ASS'Y	2	
5	26116-180902	BOLT	2	
6	TA00016333B	FRAME LOWER L	1	
7	TA00016335A	FRAME LOWER R	1	
8	TTF8170000A4	BOLT	8	
9	26716-160002	NUT	8	
10	22217-160000	WASHER, SPRING (Φ 16)	8	
11	22137-160000	WASHER, PLAIN (Φ 16)	8	
12	26013-120322	HEX BOLT W/WASHER	4	
13	26013-120302	HEX BOLT W/WASHER	6	
14	22312-120220	PIN, DOWEL (12-22)	2	
15	TA00000735B	LOWER LINK BRACKET, LH	1	
16	TA00000736B	LOWER LINK BRACKET, RH	1	
17	22137-140000	WASHER, PLAIN (Φ 14)	8	
18	22217-140000	WASHER, SPRING (Φ 14)	8	
19	22217-140000	WASHER, SPRING (Φ 14)	8	
20	TA00028271A	LOW FRAME L ASSM	1	
21	TA00028272A	LOW FRAME R ASSM	1	
22	26116-121252		4	
23	22217-120000	WASHER, SPRING (Φ 12)	4	
24	26116-140452	BOLT	4	
25	22217-140000	WASHER, SPRING (Φ 14)	4	
26	26116-160402	BOLT	8	
27	22217-160000	WASHER, SPRING (Φ 16)	8	
28	26016-100352	BOLT	4	
29	TA00029124A	보스	1	
30	TA00029096A	보스	3	
31	TA00028304A	REAR FRAME ASSM	1	
32	TA00028271A	LOW FRAME L ASSM	1	
33	TA00028272A	LOW FRAME R ASSM	1	

FIG C160 4520R(2014~)	Front_Weight	Year/Month 2020/02

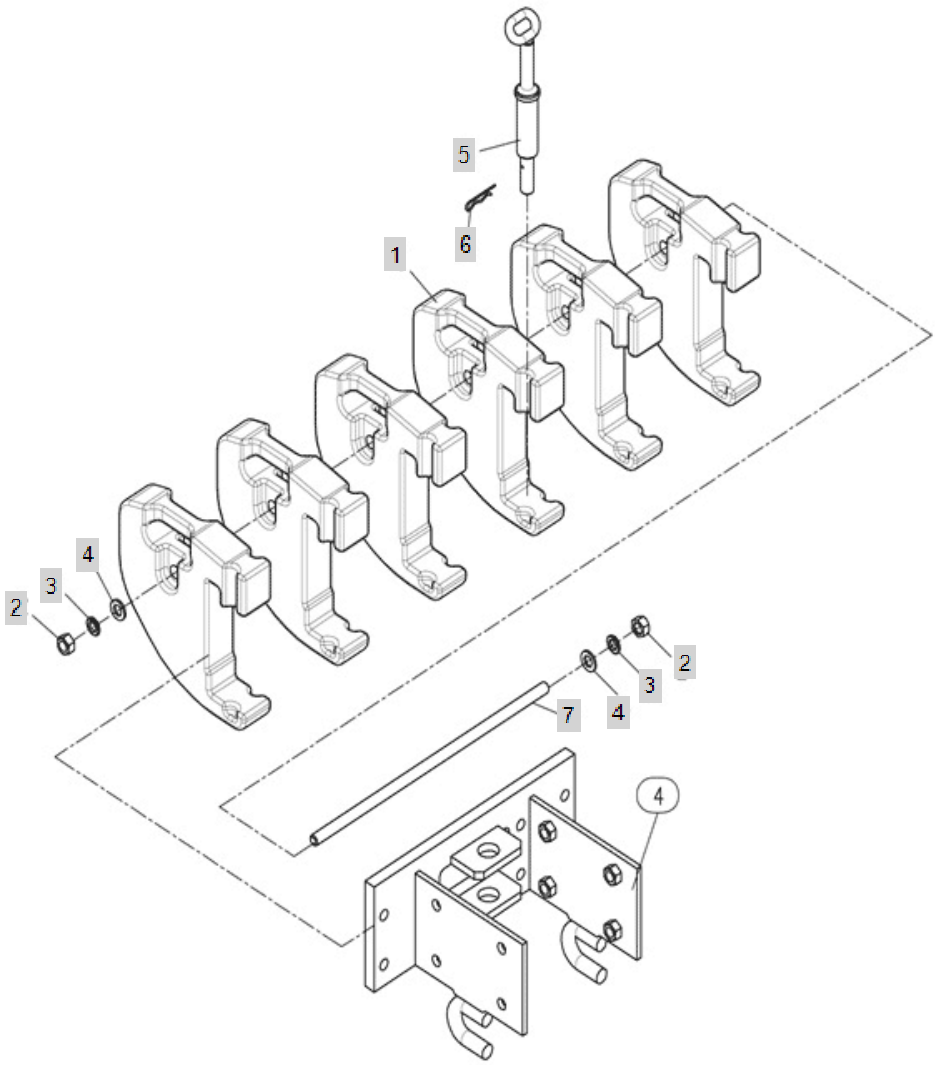

FIG C160 4520R(2014~)	Front_Weight	Year/Month 2020/02

KeyNo.	Part Number	Part Name	Quantity	Other
1	TCK1010000A3	WEIGHT, FRONT	4	
2	26716-160002	NUT	2	
3	22217-160000	WASHER, SPRING (Φ 16)	2	
4	22137-160000	WASHER, PLAIN (Φ 16)	2	
5	TA00016799A	PIN, WEIGHT	1	
6	22360-200000	PIN , SNAP (20Φ)	1	
7	TCK1030000A		1	
7-1	TA00016912A	FIX BAR, WEIGHT	1	

FIG C161D-1 4520R(2014~)	Engine_Sub_4cylinder	Year/Month 2020/02

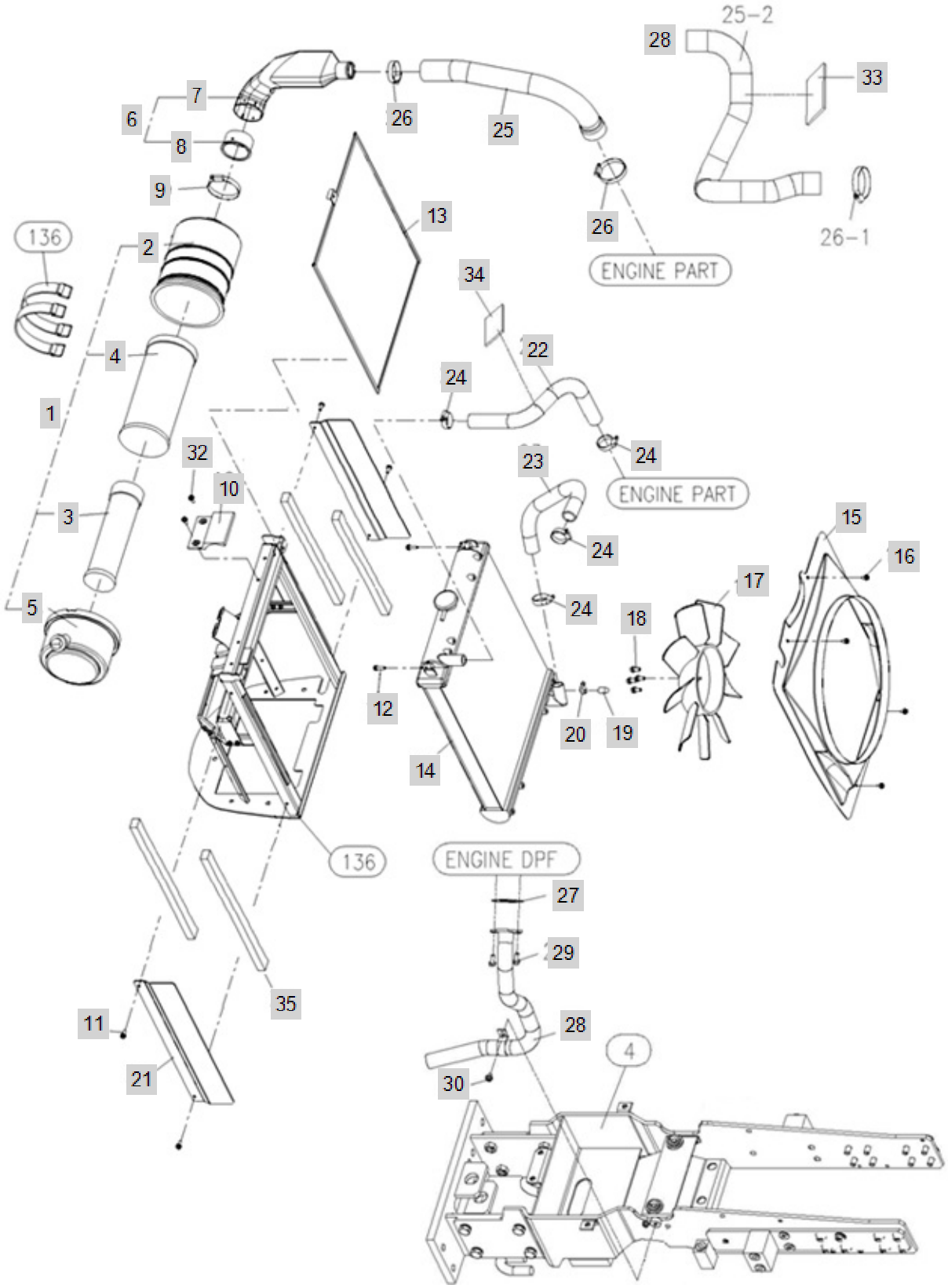

FIG C161D-1 4520R(2014~)	Engine_Sub_4cylinder	Year/Month 2020/02

KeyNo.	Part Number	Part Name	Quantity	Other
1	HLT0621000A2	AIRCLEANER A'SSY	1	
2	HLT0621010A9	BODY, AIRCLEANER	1	
3	HLT0621020A9	ELEMENT, AIR CLEANER (OUTER)	1	
4	HLT0621030A9	ELEMENT, AIR CLEANER (INNER)	1	
5	HLT0621040A9	COVER	1	
6	TA00025594A	INTAKE PIPE ASSY	1	
7	TA00025593A	PIPE	1	
8	TA00021622A	SEAL	1	
9	23000-080000	HOSECLAMP80	1	
10	TA00025591A	CUSHION RUBBER	1	
11	26106-060162	HEXFLANGEBOLT	4	
12	26014-060252	Bolt, Hexa (6-25)	2	
13	TA00024833B	NET	1	
14	EA00001873A	RADIATOR	1	
15	TA00025652B	SHROUD	1	
16	HRA1203200A4	TAPPINGSCREW	4	
17	TA00034662A	COOLING FAN (D400)	1	
18	26106-080162	SCREW,HEXFLANGEHEADCAP	4	
19	HRC1201200A4	CAP,COOLER	1	
20	23000-016000	Clip, Hose (Φ16)	1	
21	TA00025570A	RADIATOR BRACKET	2	
22	TA00034849A	HOSE A, COOLING	1	
23	TA00025609A	HOSE, COOLANT (B)	1	
24	23010-038000	HOSEBAND	4	
25	TA00035217A	INTAKE HOSE	1	
26	23000-054000	HOSECLAMP54	2	
27	HK0514000EA4	GASKET	1	
28	TA00034860A	EXHAUST PIPE ASS'Y	1	
29	26106-080202	SQR FLANGE BOLT	2	
30	26106-080122	Bolt, Hexa (8-12)	1	
32	26015-060162	BOLT	2	
33	TA00036162A	INSULATOR	3	
34	TA00036163A	INSULATOR	1	
35	TA00036707A	SEAL(RD)	4	
31	TA00026821A	COVER	1	

FIG C161D-2 4520R(2014~)	엔진 조립 관계	Year/Month 2020/02

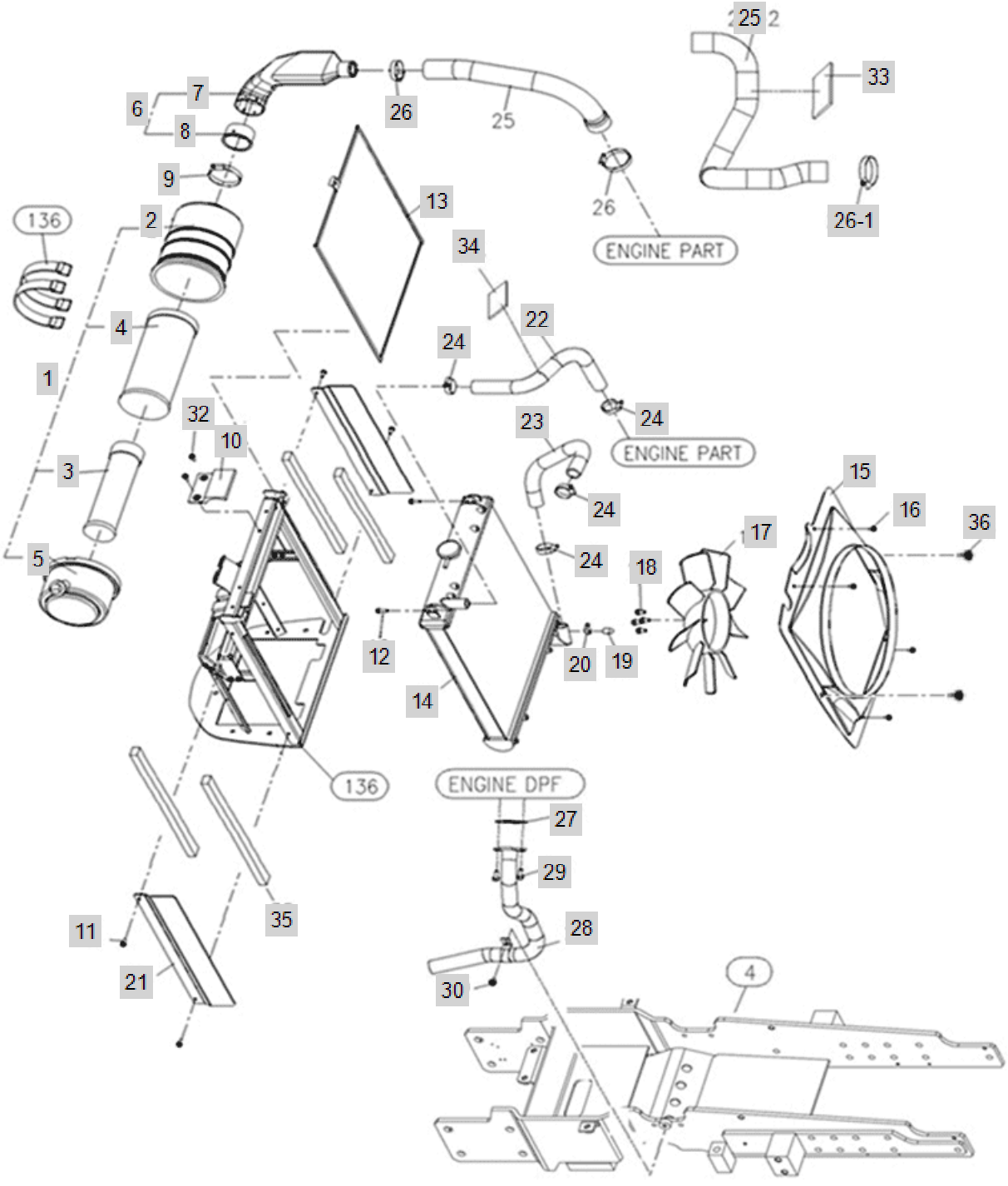

FIG C161D-2 4520R(2014~)	엔진 조립 관계	Year/Month 2020/02

KeyNo.	Part Number	Part Name	Quantity	Other
1	HLT0621000A2	AIRCLEANER A'SSY	1	
2	HLT0621010A9	BODY, AIRCLEANER	1	
3	HLT0621020A9	ELEMENT, AIR CLEANER (OUTER)	1	
4	HLT0621030A9	ELEMENT, AIR CLEANER (INNER)	1	
5	HLT0621040A9	COVER	1	
6	TA00025594A	INTAKE PIPE ASSY	1	
7	TA00025593A	PIPE	1	
8	TA00021622A	SEAL	1	
9	23000-080000	HOSECLAMP80	1	
10	TA00025591A	CUSHION RUBBER	1	
11	26106-060162	HEXFLANGEBOLT	4	
12	26014-060252	Bolt, Hexa (6-25)	2	
13	TA00024833B	NET	1	
14	EA00003972A	RADIATOR	1	
15	TA00032760E	SHROUD	1	
16	HRA1203200A4	TAPPINGSCREW	4	
17	TA00034662A	COOLING FAN (D400)	1	
18	26106-080162	SCREW,HEXFLANGEHEADCAP	4	
19	HRC1201200A4	CAP,COOLER	1	
20	23000-016000	Clip, Hose (Φ16)	1	
21	TA00049446A	BRACKET ASS'Y, RADIATOR	2	
22	TA00034849A	HOSE A, COOLING	1	
23	TA00025609C	HOSE IN COOLING	1	
24	23010-038000	HOSEBAND	4	
25	TA00035166A	INTAKE HOSE	1	
26	23000-054000	HOSECLAMP54	1	
26-1	23000-070000	CLAMP,HOSE	1	
27	HK0514000EA4	GASKET	1	
28	TA00034860C	EXHAUST PIPE ASS'Y	1	
29	26106-080202	SQR FLANGE BOLT	2	
30	26106-080122	Bolt, Hexa (8-12)	1	
32	TA00026821A	COVER	1	
33	26015-060162	BOLT	2	
34	TA00036162C	INSULATOR	3	
35	TA00036163C	GUIDE(L),FOOT REST	1	
36	TA00036707A	SEAL(RD)	4	
37	26106-080162	SCREW,HEXFLANGEHEADCAP	2	

FIG C161E-2 4520R(2014~)	엔진 조립 관계	Year/Month 2020/02

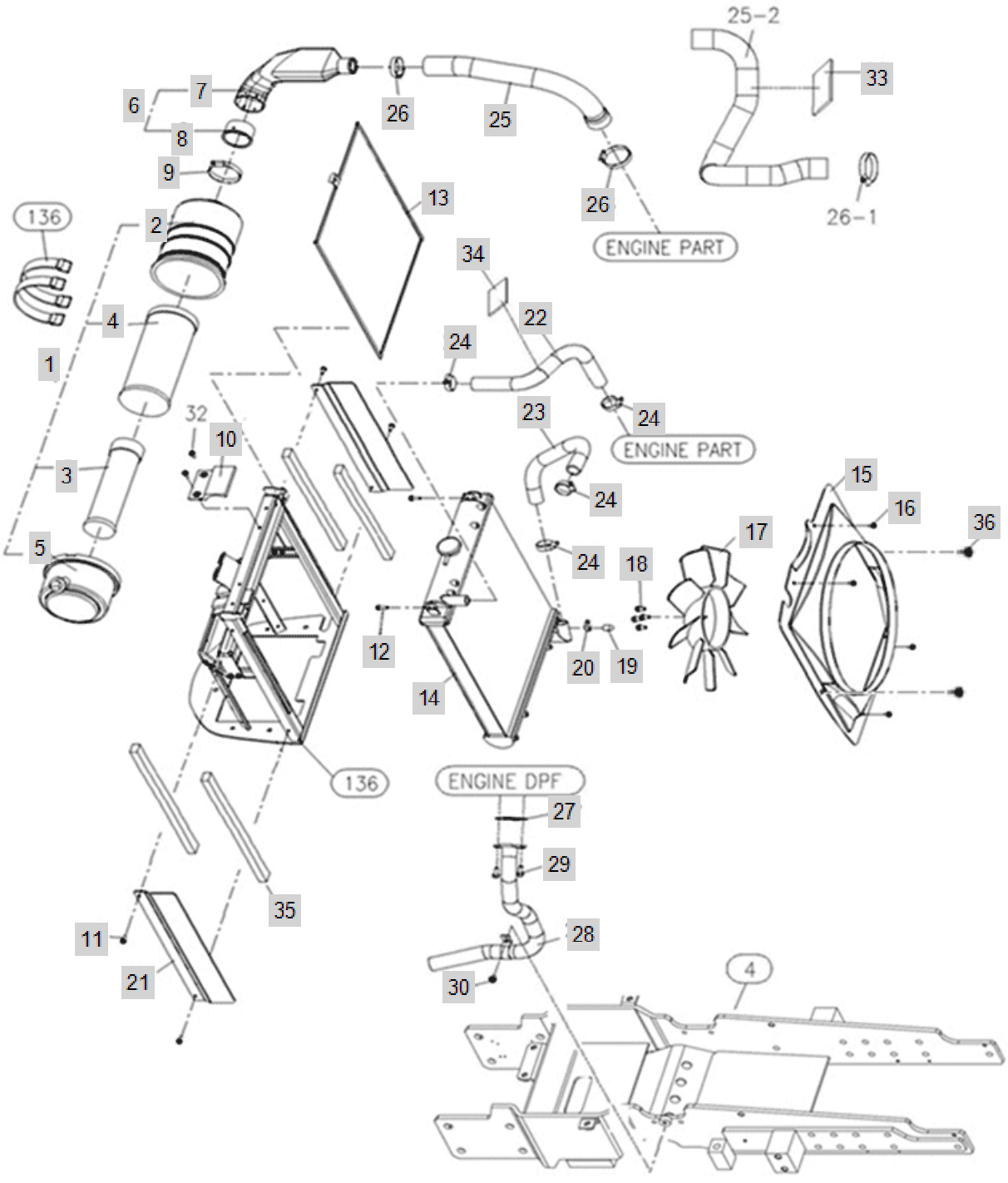

FIG C161E-2 4520R(2014~)	엔진 조립 관계	Year/Month 2020/02

KeyNo.	Part Number	Part Name	Quantity	Other
1	HLT0621000A2	AIRCLEANER A'SSY	1	
2	HLT0621010A9	BODY, AIRCLEANER	1	
3	HLT0621020A9	ELEMENT, AIR CLEANER (OUTER)	1	
4	HLT0621030A9	ELEMENT, AIR CLEANER (INNER)	1	
5	HLT0621040A9	COVER	1	
6	TA00025594A	INTAKE PIPE ASSY	1	
7	TA00025593A	PIPE	1	
8	TA00021622A	SEAL	1	
9	23000-080000	HOSECLAMP80	1	
10	TA00025591A	CUSHION RUBBER	1	
11	26106-060162	HEXFLANGEBOLT	4	
12	26014-060252	Bolt, Hexa (6-25)	2	
13	TA00024833B	NET	1	
14	EA00003972A	RADIATOR	1	
15	TA00025652B	SHROUD	1	
16	HRA1203200A4	TAPPINGSCREW	4	
17	TA00034662A	COOLING FAN (D400)	1	
18	26106-080162	SCREW,HEXFLANGEHEADCAP	4	
19	HRC1201200A4	CAP,COOLER	1	
20	23000-016000	Clip, Hose (Φ16)	1	
21	TA00049446A	BRACKET ASS'Y, RADIATOR	2	
22	TA00035222A	HOSE A, COOLING	1	
23	TA00025927B	HOSE IN COOLING	1	
24	23010-038000	HOSEBAND	4	
25	TA00035166A	INTAKE HOSE	1	
26	23000-054000	HOSECLAMP54	2	
27	HK0514000EA4	GASKET	1	
28	TA00049271B	EXHAUST PIPE ASS'Y	1	
29	26106-080202	SQR FLANGE BOLT	2	
30	26106-080122	Bolt, Hexa (8-12)	1	
31	TA00026822A	COVER	1	
33	26015-060162	BOLT	2	
34	TA00036162C	INSULATOR	3	
35	TA00036163C	GUIDE(L),FOOT REST	1	
36	TA00036707A	SEAL(RD)	4	
37	26106-080162	SCREW,HEXFLANGEHEADCAP	2	

FIG C191-1 4520R(2014~)	4Port_Assembly	Year/Month 2020/02

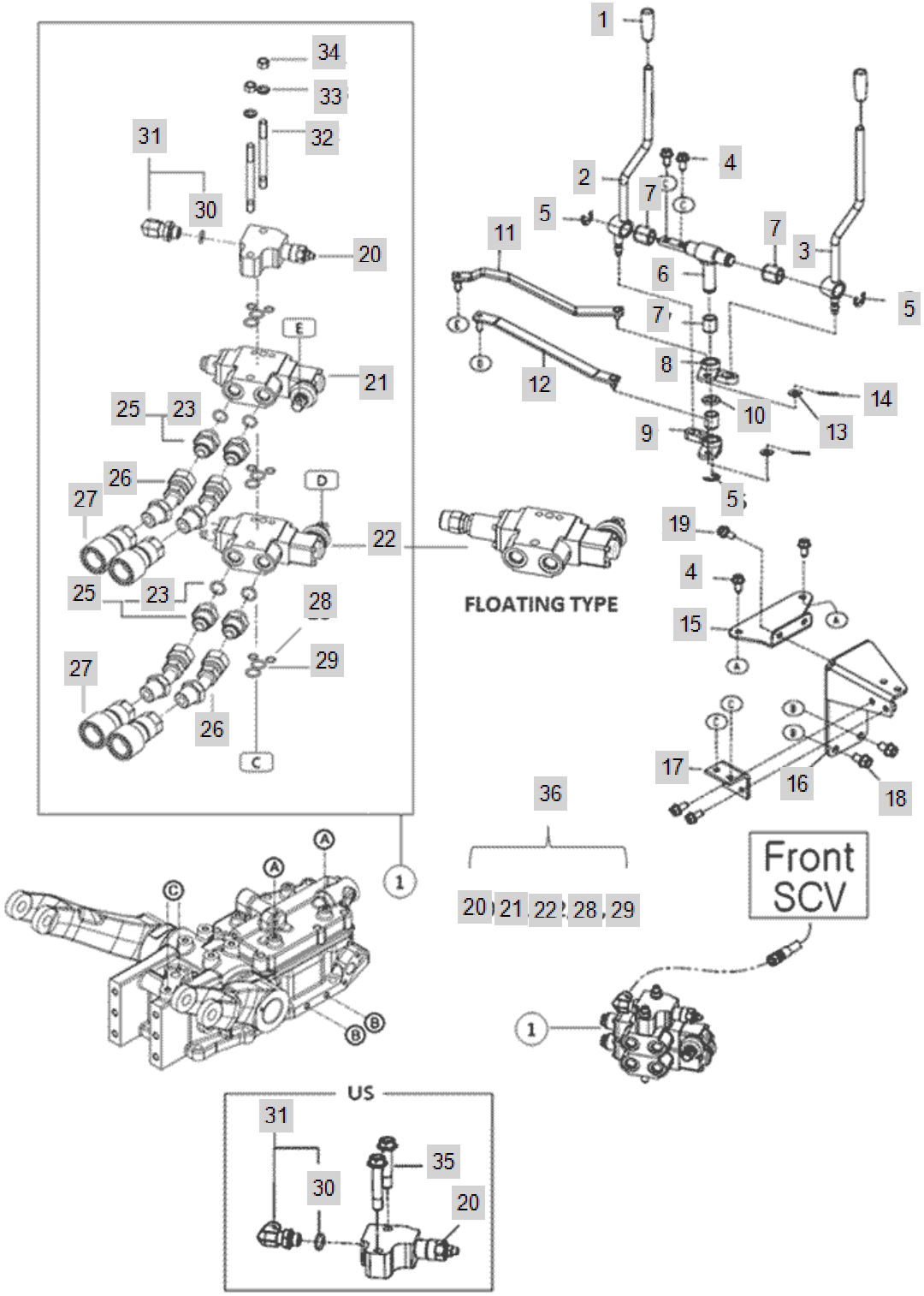

FIG C191-1 4520R(2014~)	4Port_Assembly	Year/Month 2020/02

KeyNo.	Part Number	Part Name	Quantity	Other
1	VD05460000A4	LEVER(BLACK)	2	
2	TA00034047B	LEVER A ASS'Y	1	
3	TA00034049B	LEVER B ASS'Y	1	
4	26106-080162	SCREW,HEXFLANGEHEADCAP	6	
5	22272-000120	RING, CIRCLIP (Φ 12)	3	
6	TA00034042C	SHAFT ASS'Y	1	
7	24550-016200	DRY BUSH 16X20	4	
8	TA00036430A	BOSS B ASS'Y PTO 3SD	1	
9	TA00036429A	BOSS B ASS'Y PTO 3SD	1	
10	TA00034062A	PLATE	1	
11	TA00036297B	LINK ASSY 2	1	
12	TA00034019A	LINK 1 ASS'Y	1	
13	22137-080000	WASHER, PLAIN (Φ 08)	4	
14	22417-200200	PIN , COTTER (2-20)	4	
15	TA00036443B	BRACKET	1	
16	TA00036941A	HOLDING BRACKET, SCV LEVER	1	
17	TA00036949A	BRACKET	1	
18	26106-100162	SCREW,HEXFLANGEHEADCAP	2	
19	26106-080182	SCREW,HEXFLANGEHEADCAP	4	
20	TA00033977A	COVER RELIEF	1	
21	TA00037393A	SCV2(D)	1	
22	TA00028226A	REAR SCV 1	1	
22-OPTION	TA00048561A	SCV(FLOATING)	1	
23	24311-000160	O-RING, DYNAMIC (Φ16)	1	
25	TA00042245A	ADAPTER	2	
26	TA00042242A	PIPE, SCV	2	
27	FBA3150000A4	ARM, JOINT(1/2") -> FBA3150000A3	2	
28	24311-000100	O-RING, DYNAMIC (Φ10)	2	
29	24311-000160	O-RING, DYNAMIC (Φ16)	4	
30	24311-000140	O-RING, DYNAMIC (Φ14)	4	
31	TA00035078A	ELBOW	1	
32	TA00034089A	BOLT	1	
33	22217-100000	WASHER, SPRING (Φ 10)	2	
34	26716-100002	Nut, Hexa (Φ10)	2	
35	26013-100452	HEX BOLT W/WASHER	2	
36	TA00034058A	REAR SCV ASSY	1	